Data sheet | Item number: 2006-1301

3-conductor through terminal block; 6 mm²; suitable for Ex e II applications; side and center marking; for DIN-rail 35 x 15 and 35 x 7.5; Push-in CAGE CLAMP®; 6,00 mm²; gray

www.wago.com/2006-1301

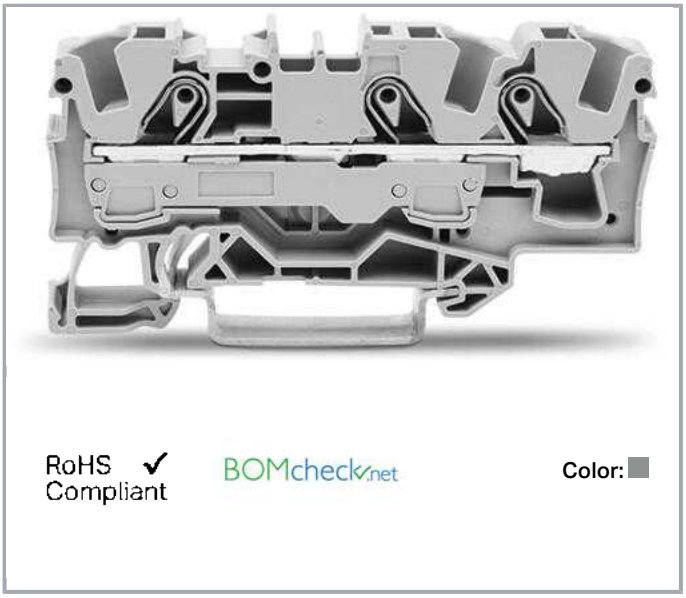

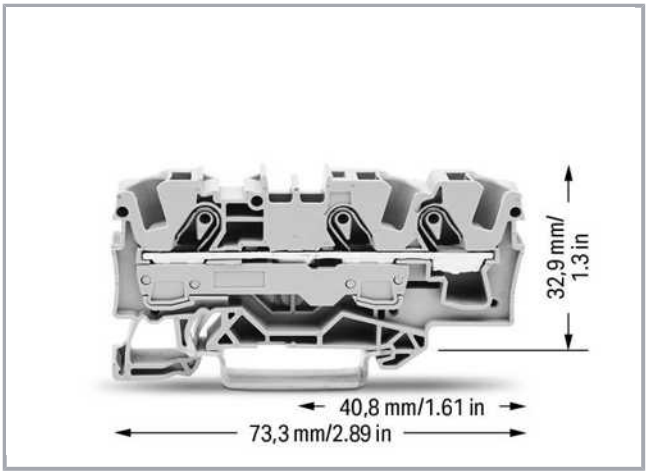

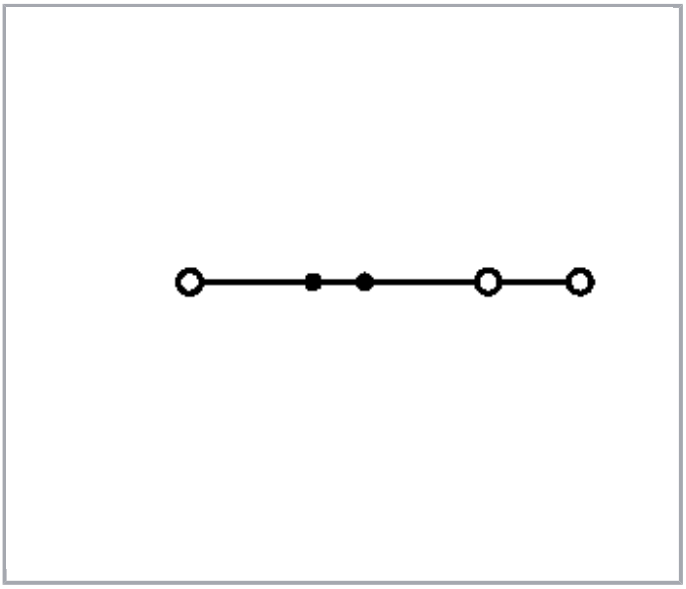

Data

Electrical data

Subject to changes. Please also observe the further product documentation!

WAGO Kontakttechnik GmbH & Co. KG
Hansastr. 27
32423 Minden
Phone: +49571 887-0 | Fax: +49571 887-169
Email: info.de@wago.com | Web: www.wago.com

Do you have any questions about our products?
We are always happy to take your call at +49 (571) 887-44222.

Ratings per IEC/EN 60664-1

Ratings per	IEC/EN 60947-7-1
Rated voltage (III / 3)	800 V
Rated impulse voltage (III / 3)	8 kV
Rated current	41 A
Rated current (2)	57 A
Legend (ratings)	(III / 3) ≙ Overvoltage category III / Pollution degree 3

Approvals per UL 1059

Rated voltage UL (Use Group B)	600 V
Rated current UL (Use Group B)	50 A
Rated voltage UL (Use Group C)	600 V
Rated current UL (Use Group C)	50 A
Approvals per	UL 1059

Approvals per CSA

Rated voltage CSA (Use Group B)	600 V
Rated current CSA (Use Group B)	50 A
Rated voltage CSA (Use Group C)	600 V
Rated current CSA (Use Group C)	50 A

Approvals Ex

Rated voltage EN (Ex e II)	550 V
Rated current (Ex e II)	36 A
Rated current (Ex e II) with jumper	33 A

Connection data

Connection technology	Push-in CAGE CLAMP®
Actuation type	Push-in Open Tool Slot
Connectable conductor materials	Copper
Nominal cross section	6 mm²
Solid conductor	0,5 … 10 mm² / 20 … 8 AWG
Solid conductor, push-in termination	2,5 … 10 mm² / 14 … 8 AWG
Fine-stranded conductor	0,5 … 10 mm² / 20 … 8 AWG

Subject to changes. Please also observe the further product documentation!

WAGO Kontakttechnik GmbH & Co. KG
Hansastr. 27
32423 Minden
Phone: +49571 887-0 | Fax: +49571 887-169
Email: info.de@wago.com | Web: www.wago.com

Do you have any questions about our products?
We are always happy to take your call at +49 (571) 887-44222.

Fine-stranded conductor with ferrule with plastic collar	2,5 … 6 mm² / 16 … 10 AWG
Fine-stranded conductor with ferrule, push-in termination, from	2,5 … 6 mm² / 16 … 10 AWG
Strip length	13 … 15 mm / 0.51 … 0.59 inch
Total number of connection points	3
Total number of potentials	1
Number of levels	1
Type of wiring	Front-entry wiring
Note (conductor cross-section)	Depending on the conductor characteristic, a conductor with a smaller cross section can also be inserted via push-in termination.
Number of jumper slots	2

Geometrical Data

Width	7,5 mm / 0.295 inch
Height from upper-edge of DIN-35 rail	32,9 mm / 1.295 inch
Depth	73,5 mm / 2.894 inch

Mechanical data

Design	horizontal
Type of mounting	DIN-35 rail
Marking level	Center/side marking

Material Data

Color	gray
Insulating material	Polyamide 66 (PA 66)
Fire load	0.196 MJ
Weight	11.9 g

Commercial data

Product Group	22 (TOPJOB S)
Packaging type	BOX
Country of origin	DE
GTIN	4017332999687
Customs Tariff No.	85369010000

Approvals / Certificates

Ex-Approvals

Certificate

WAGO Kontakttechnik GmbH & Co. KG
Hansastr. 27
32423 Minden
Phone: +49571 887-0 | Fax: +49571 887-169
Email: info.de@wago.com | Web: www.wago.com

Logo	Approval	Additional Approval Text	name
	ATEx Physikalisch Technische Bundesanstalt (PTB)	EN 60079	PTB 05 ATEX 1030 U (II 2 G Ex eII bzw. IM 2 Exe I)
	IECEx Physikalisch Technische Bundesanstalt (PTB)	IEC 60079	IECEx PTB 03.0014 U (Ex eIIC Gb and Ex el Mb)

Country specific Approvals

Logo	Approval	Additional Approval Text	Certificate name
	CCA DEKRA Certification B.V.	IEC 60947	NTR NL 7653/A1
	CSA DEKRA Certification B.V.	C22.2 No. 158	1543858

Ship Approvals

Logo	Approval	Additional Approval Text	Certificate name
	ABS American Bureau of Shipping	EN 60947	20-HG1941090-PDA
	BV Bureau Veritas S.A.	EN 60947	38586/A0 BV
	DNV GL Det Norske Veritas, Germanischer Lloyd	-	TAE00001V2
	LR Lloyds Register	EN 60947	91/20112 (E9)

Subject to changes. Please also observe the further product documentation!

WAGO Kontakttechnik GmbH & Co. KG
Hansastr. 27
32423 Minden
Phone: +49571 887-0 | Fax: +49571 887-169
Email: info.de@wago.com | Web: www.wago.com

Do you have any questions about our products?
We are always happy to take your call at +49 (571) 887-44222.

UL-Approvals

Logo	Approval	Additional Approval Text	Certificate name
	UL UL International Germany GmbH	UL 1059	E45172

Counterpart

Compatible products

End plate

	Item no.: 2006-1391 End and intermediate plate; 1 mm thick; gray	www.wago.com/2006-1391
	Item no.: 2006-1392 End and intermediate plate; 1 mm thick; orange	www.wago.com/2006-1392
	Item no.: 2006-1393 Separator plate; 2 mm thick; oversized; gray	www.wago.com/2006-1393
	Item no.: 2006-1394 Separator plate; 2 mm thick; oversized; orange	www.wago.com/2006-1394
	Item no.: 209-191 Separator for Ex e/Ex i applications; 3 mm thick; 120 mm wide; orange	www.wago.com/209-191

Marking accessories

	Item no.: 2009-110 Marking strips; on reel; not stretchable; plain; snap-on type; white	www.wago.com/2009-110
	Item no.: 2009-115 WMB-Inline; for Smart Printer; 1500 pieces on roll; stretchable 5 - 5.2 mm; plain; snap-on type; white	www.wago.com/2009-115
	Item no.: 2009-115/000-002 WMB-Inline; for Smart Printer; 1500 pieces on roll; stretchable 5 - 5.2 mm; plain; snap-on type; yellow	www.wago.com/2009-115/000-002

Subject to changes. Please also observe the further product documentation!

WAGO Kontakttechnik GmbH & Co. KG
Hansastr. 27
32423 Minden
Phone: +49571 887-0 | Fax: +49571 887-169
Email: info.de@wago.com | Web: www.wago.com

Do you have any questions about our products?
We are always happy to take your call at +49 (571) 887-44222.

	Item no.: 2009-115/000-006 WMB-Inline; for Smart Printer; 1500 pieces on roll; stretchable 5 - 5.2 mm; plain; snap-on type; blue	www.wago.com/2009-115/000-006
	Item no.: 2009-115/000-007 WMB-Inline; for Smart Printer; 1500 pieces on roll; stretchable 5 - 5.2 mm; plain; snap-on type; gray	www.wago.com/2009-115/000-007
	Item no.: 2009-115/000-012 WMB-Inline; for Smart Printer; 1500 pieces on roll; stretchable 5 - 5.2 mm; plain; snap-on type; orange	www.wago.com/2009-115/000-012
	Item no.: 2009-115/000-017 WMB-Inline; for Smart Printer; 1500 pieces on roll; stretchable 5 - 5.2 mm; plain; snap-on type; light green	www.wago.com/2009-115/000-017
	Item no.: 2009-115/000-023 WMB-Inline; for Smart Printer; 1500 pieces on roll; stretchable 5 - 5.2 mm; plain; snap-on type; green	www.wago.com/2009-115/000-023
	Item no.: 2009-115/000-024 WMB-Inline; for Smart Printer; 1500 pieces on roll; stretchable 5 - 5.2 mm; plain; snap-on type; violet	www.wago.com/2009-115/000-024
	Item no.: 2009-145 Mini-WSB Inline; for Smart Printer; 1700 pieces on roll; stretchable 5 - 5.2 mm; plain; snap-on type; white	www.wago.com/2009-145
	Item no.: 2009-145/000-002 Mini-WSB Inline; for Smart Printer; 1700 pieces on roll; stretchable 5 - 5.2 mm; plain; snap-on type; yellow	www.wago.com/2009-145/000-002
	Item no.: 2009-145/000-005 Mini-WSB Inline; for Smart Printer; 1700 pieces on roll; stretchable 5 - 5.2 mm; plain; snap-on type; red	www.wago.com/2009-145/000-005
	Item no.: 2009-145/000-006 Mini-WSB Inline; for Smart Printer; 1700 pieces on roll; stretchable 5 - 5.2 mm; plain; snap-on type; blue	www.wago.com/2009-145/000-006
	Item no.: 2009-145/000-007 Mini-WSB Inline; for Smart Printer; 1700 pieces on roll; stretchable 5 - 5.2 mm; plain; snap-on type; gray	www.wago.com/2009-145/000-007
	Item no.: 2009-145/000-012 Mini-WSB Inline; for Smart Printer; 1700 pieces on roll; stretchable 5 - 5.2 mm; plain; snap-on type; orange	www.wago.com/2009-145/000-012
	Item no.: 2009-145/000-023 Mini-WSB Inline; for Smart Printer; 1700 pieces on roll; stretchable 5 - 5.2 mm; plain; snap-on type; green	www.wago.com/2009-145/000-023

Subject to changes. Please also observe the further product documentation!

WAGO Kontakttechnik GmbH & Co. KG
Hansastr. 27
32423 Minden
Phone: +49571 887-0 | Fax: +49571 887-169
Email: info.de@wago.com | Web: www.wago.com

Do you have any questions about our products?
We are always happy to take your call at +49 (571) 887-44222.

	Item no.: 2009-145/000-024 Mini-WSB Inline; for Smart Printer; 1700 pieces on roll; stretchable 5 - 5.2 mm; plain; snap-on type; violet	www.wago.com/2009-145/000-024
	Item no.: 2009-191 Group marker carrier	www.wago.com/2009-191
	Item no.: 2009-192 Group marker carrier	www.wago.com/2009-192
	Item no.: 2009-193 Group marker carrier	www.wago.com/2009-193
	Item no.: 2009-198 Adaptor	www.wago.com/2009-198
	Item no.: 248-501 Miniature WSB Quick marking system; plain; Marker width 5 mm; 10 strips with 10 markers per card	www.wago.com/248-501
	Item no.: 248-501/000-002 Mini-WSB marking card; as card; not stretchable; plain; snap-on type; yellow	www.wago.com/248-501/000-002
	Item no.: 248-501/000-005 Mini-WSB marking card; as card; not stretchable; plain; snap-on type; red	www.wago.com/248-501/000-005
	Item no.: 248-501/000-006 Mini-WSB marking card; as card; not stretchable; plain; snap-on type; blue	www.wago.com/248-501/000-006
	Item no.: 248-501/000-007 Mini-WSB marking card; as card; not stretchable; plain; snap-on type; gray	www.wago.com/248-501/000-007
	Item no.: 248-501/000-012 Mini-WSB marking card; as card; not stretchable; plain; snap-on type; orange	www.wago.com/248-501/000-012
	Item no.: 248-501/000-017 Mini-WSB marking card; as card; not stretchable; plain; snap-on type; light green	www.wago.com/248-501/000-017
	Item no.: 248-501/000-023 Mini-WSB marking card; as card; not stretchable; plain; snap-on type; green	www.wago.com/248-501/000-023
	Item no.: 248-501/000-024 Mini-WSB marking card; as card; not stretchable; plain; snap-on type; violet	www.wago.com/248-501/000-024
	Item no.: 793-501 WMB marking card; as card; not stretchable; plain; snap-on type; white	www.wago.com/793-501

Subject to changes. Please also observe the further product documentation!

WAGO Kontakttechnik GmbH & Co. KG
Hansastr. 27
32423 Minden
Phone: +49571 887-0 | Fax: +49571 887-169
Email: info.de@wago.com | Web: www.wago.com

Do you have any questions about our products?
We are always happy to take your call at +49 (571) 887-44222.

	Item no.: 793-501/000-002 WMB marking card; as card; not stretchable; plain; snap-on type; yellow	www.wago.com/793-501/000-002
	Item no.: 793-501/000-005 WMB marking card; as card; not stretchable; plain; snap-on type; red	www.wago.com/793-501/000-005
	Item no.: 793-501/000-006 WMB marking card; as card; not stretchable; plain; snap-on type; blue	www.wago.com/793-501/000-006
	Item no.: 793-501/000-007 WMB marking card; as card; not stretchable; plain; snap-on type; gray	www.wago.com/793-501/000-007
	Item no.: 793-501/000-012 WMB marking card; as card; not stretchable; plain; snap-on type; orange	www.wago.com/793-501/000-012
	Item no.: 793-501/000-017 WMB marking card; as card; not stretchable; plain; snap-on type; light green	www.wago.com/793-501/000-017
	Item no.: 793-501/000-023 WMB marking card; as card; not stretchable; plain; snap-on type; green	www.wago.com/793-501/000-023
	Item no.: 793-501/000-024 WMB marking card; as card; not stretchable; plain; snap-on type; violet	www.wago.com/793-501/000-024
	Item no.: 793-5501 WMB marking card; as card; for terminal block width 5 - 17.5 mm; stretchable 5 - 5.2 mm; plain; snap-on type; white	www.wago.com/793-5501
	Item no.: 793-5501/000-002 WMB marking card; as card; for terminal block width 5 - 17.5 mm; stretchable 5 - 5.2 mm; plain; snap-on type; yellow	www.wago.com/793-5501/000-002
	Item no.: 793-5501/000-005 WMB marking card; as card; for terminal block width 5 - 17.5 mm; stretchable 5 - 5.2 mm; plain; snap-on type; red	www.wago.com/793-5501/000-005
	Item no.: 793-5501/000-006 WMB marking card; as card; for terminal block width 5 - 17.5 mm; stretchable 5 - 5.2 mm; plain; snap-on type; blue	www.wago.com/793-5501/000-006
	Item no.: 793-5501/000-007 WMB marking card; as card; for terminal block width 5 - 17.5 mm; stretchable 5 - 5.2 mm; plain; snap-on type; gray	www.wago.com/793-5501/000-007

Item no.: 793-5501/000-012

Subject to changes. Please also observe the further product documentation!

WAGO Kontakttechnik GmbH & Co. KG
Hansastr. 27
32423 Minden
Phone: +49571 887-0 | Fax: +49571 887-169
Email: info.de@wago.com | Web: www.wago.com

Do you have any questions about our products?
We are always happy to take your call at +49 (571) 887-44222.

	WMB marking card; as card; for terminal block width 5 - 17.5 mm; stretchable 5 - 5.2 mm; plain; snap-on type; orange	www.wago.com/793-5501/000-012
	Item no.: 793-5501/000-017 WMB marking card; as card; for terminal block width 5 - 17.5 mm; stretchable 5 - 5.2 mm; plain; snap-on type; green	www.wago.com/793-5501/000-017
	Item no.: 793-5501/000-023 WMB marking card; as card; for terminal block width 5 - 17.5 mm; stretchable 5 - 5.2 mm; plain; snap-on type; light green	www.wago.com/793-5501/000-023
	Item no.: 793-5501/000-024 WMB marking card; as card; for terminal block width 5 - 17.5 mm; stretchable 5 - 5.2 mm; plain; snap-on type; violet	www.wago.com/793-5501/000-024

General accessories

	Item no.: 2006-191 Lockout cap; for wire insertion and actuating opening; gray	www.wago.com/2006-191

Protective Warning Marker

	Item no.: 2006-115 Protective warning marker; with high-voltage symbol, black; for 5 terminal blocks; yellow	www.wago.com/2006-115

Carrier rail

	Item no.: 210-112 Steel carrier rail; 35 x 7.5 mm; 1 mm thick; 2 m long; slotted; according to EN 60715; "Hole width 25 mm	www.wago.com/210-112
	Item no.: 210-113 Steel carrier rail; 35 x 7.5 mm; 1 mm thick; 2 m long; unslotted; according to EN 60715	www.wago.com/210-113
	Item no.: 210-114 Steel carrier rail; 35 x 15 mm; 1.5 mm thick; 2 m long; unslotted; similar to EN 60715	www.wago.com/210-114
	Item no.: 210-115 Steel carrier rail; 35 x 7.5 mm; 1 mm thick; 2 m long; slotted; according to EN 60715; "Hole width 18 mm	www.wago.com/210-115
	Item no.: 210-118 Steel carrier rail; 35 x 15 mm; 2.3 mm thick; 2 m long; unslotted; according to EN 60715	www.wago.com/210-118
	Item no.: 210-196 Aluminum carrier rail; 35 x 8.2 mm; 1.6 mm thick; 2 m long; unslotted; similar to EN 60715; silver-colored	www.wago.com/210-196
	Item no.: 210-197 Steel carrier rail; 35 x 15 mm; 1.5 mm thick; 2 m long; slotted; similar to EN 60715	www.wago.com/210-197
	Item no.: 210-198 Copper carrier rail; 35 x 15 mm; 2.3 mm thick; 2 m long; unslotted; according to EN 60715; copper-colored	www.wago.com/210-198
	Item no.: 210-504 Steel carrier rail; 35 x 7.5 mm; 1 mm thick; 2 m long; slotted; galvanized; according to EN 60715	www.wago.com/210-504

WAGO Kontakttechnik GmbH & Co. KG
Hansastr. 27
32423 Minden
Phone: +49571 887-0 | Fax: +49571 887-169
Email: info.de@wago.com | Web: www.wago.com

	Item no.: 210-505 Steel carrier rail; 35 x 7.5 mm; 1 mm thick; 2 m long; unslotted; galvanized; according to EN 60715	www.wago.com/210-505
	Item no.: 210-506 Steel carrier rail; 35 x 15 mm; 1.5 mm thick; 2 m long; unslotted; galvanized; similar to EN 60715	www.wago.com/210-506
	Item no.: 210-508 Steel carrier rail; 35 x 15 mm; 1.5 mm thick; 2 m long; slotted; galvanized; similar to EN 60715	www.wago.com/210-508
ferrule		
	Item no.: 216-208 Ferrule; Sleeve for 6 mm² / AWG 10; insulated; electro-tin plated; electrolytic copper; gastight crimped; acc. to DIN 46228, Part 4/09.90; yellow	www.wago.com/216-208
	Item no.: 216-262 Ferrule; Sleeve for 0.75 mm² / 18 AWG; insulated; electro-tin plated; electrolytic copper; gastight crimped; acc. to DIN 46228, Part 4/09.90; gray	www.wago.com/216-262
	Item no.: 216-263 Ferrule; Sleeve for 1 mm² / AWG 18; insulated; electro-tin plated; electrolytic copper; gastight crimped; acc. to DIN 46228, Part 4/09.90; red	www.wago.com/216-263
	Item no.: 216-264 Ferrule; Sleeve for 1.5 mm² / AWG 16; insulated; electro-tin plated; electrolytic copper; gastight crimped; acc. to DIN 46228, Part 4/09.90; black	www.wago.com/216-264
	Item no.: 216-266 Ferrule; Sleeve for 2.5 mm² / AWG 14; insulated; electro-tin plated; electrolytic copper; gastight crimped; acc. to DIN 46228, Part 4/09.90; blue	www.wago.com/216-266
	Item no.: 216-267 Ferrule; Sleeve for 4 mm² / AWG 12; insulated; electro-tin plated; electrolytic copper; gastight crimped; acc. to DIN 46228, Part 4/09.90; gray	www.wago.com/216-267
Jumper		
	Item no.: 2006-402 Push-in type jumper bar; insulated; 2-way; Nominal current 41 A; light gray	www.wago.com/2006-402
	Item no.: 2006-403 Push-in type jumper bar; insulated; 3-way; Nominal current 41 A; light gray	www.wago.com/2006-403
	Item no.: 2006-404 Push-in type jumper bar; insulated; 4-way; Nominal current 41 A; light gray	www.wago.com/2006-404
	Item no.: 2006-405 Push-in type jumper bar; insulated; 5-way; Nominal current 41 A; light gray	www.wago.com/2006-405
	Item no.: 2006-405/011-000 Star point jumper; insulated; 3-way (1-3-5); IN = IN terminal block; light gray	www.wago.com/2006-405/011-000
	Item no.: 2006-433 Push-in type jumper bar; insulated; from 1 to 3; Nominal current 41 A; light gray	www.wago.com/2006-433
	Item no.: 2006-434 Push-in type jumper bar; insulated; from 1 to 4; Nominal current 41 A; light gray	www.wago.com/2006-434

Subject to changes. Please also observe the further product documentation!

WAGO Kontakttechnik GmbH & Co. KG
Hansastr. 27
32423 Minden
Phone: +49571 887-0 | Fax: +49571 887-169
Email: info.de@wago.com | Web: www.wago.com

Do you have any questions about our products?
We are always happy to take your call at +49 (571) 887-44222.

	Item no.: 2006-435 Push-in type jumper bar; insulated; from 1 to 5; Nominal current 41 A; light gray	www.wago.com/2006-435
	Item no.: 2006-499 Step-down jumper; insulated; from 6/4 mm² to 4/2.5/1.5 mm²; Nominal current 32 A; light gray	www.wago.com/2006-499
	Item no.: 2016-499 Step-down jumper; insulated; from 16/10 mm² to 10/6/4/2.5 mm²; Nominal current 57 A; light gray	www.wago.com/2016-499
	Item no.: 210-103 Wire commoning chain; insulated; 50 connections; black	www.wago.com/210-103
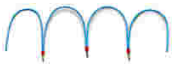	**Item no.: 210-123** Wire commoning chain; insulated; 50 connections	www.wago.com/210-123
tools		
	Item no.: 210-721 Operating tool; Blade: 5.5 x 0.8 mm; with a partially insulated shaft	www.wago.com/210-721
check		
	Item no.: 2006-511 Modular TOPJOB®S connector; modular; for jumper contact slot; 1-pole; 6,00 mm²; gray	www.wago.com/2006-511
	Item no.: 2006-549 Spacer module; modular; e.g., for bridging commoned terminal blocks; gray	www.wago.com/2006-549
	Item no.: 2009-174 Test plug adapter; for 4 mm Ø test plugs; for testing TOPJOB®S rail-mounted terminal blocks; gray	www.wago.com/2009-174
	Item no.: 2009-182 Testing tap; for max. 2.5 mm²; tool-free connection for individual test wires 0.08 - 2.5 mm; gray	www.wago.com/2009-182
	Item no.: 210-136 Test plug; 2 mm Ø; with 500 mm cable; red	www.wago.com/210-136

Downloads

Documentation

Bid Text

2006-1301 GAEB X81 - Datei	Apr 17, 2019	xml 4.2 kB	Download
2006-1301 GAEB docx - Datei	Apr 17, 2019	docx 15.1 kB	Download

Additional Information

Technical explanations	Apr 3, 2019	pdf 2.1 MB	Download

Subject to changes. Please also observe the further product documentation!

WAGO Kontakttechnik GmbH & Co. KG
Hansastr. 27
32423 Minden
Phone: +49571 887-0 | Fax: +49571 887-169
Email: info.de@wago.com | Web: www.wago.com

Do you have any questions about our products?
We are always happy to take your call at +49 (571) 887-44222.

CAD/CAE-Data

CAD data

2D/3D Models 2006-1301	URL	Download

CAE data

EPLAN Data Portal 2006-1301	URL	Download
WSCAD Universe 2006-1301	URL	Download

Installation Notes

Conductor termination

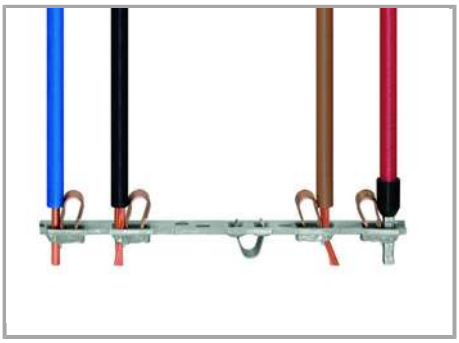

All conductor types at a glance

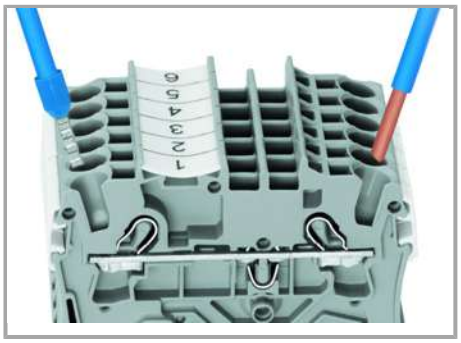

Terminating solid and ferruled conductors via push-in connection.

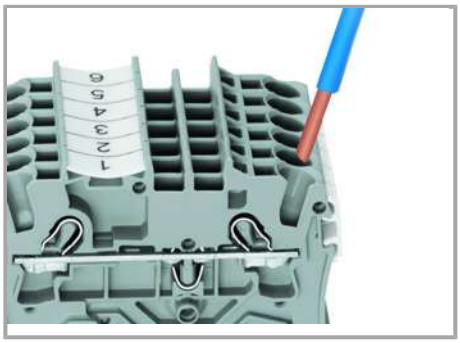

Inserting conductors via push-in termination.

Solid conductors with cross-sections from either one size above, or up to two sizes below, the rated cross-section can be simply pushed in – no tools needed.

WAGO Kontakttechnik GmbH & Co. KG
Hansastr. 27
32423 Minden
Phone: +49571 887-0 | Fax: +49571 887-169
Email: info.de@wago.com | Web: www.wago.com

Do you have any questions about our products?
We are always happy to take your call at +49 (571) 887-44222.

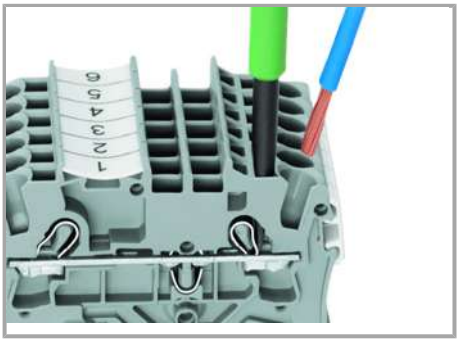

Inserting a conductor via operating tool.

Connecting fine-stranded conductors without ferrules, or small cross-sectional conductors that cannot be pushed in, is performed similarly to the original CAGE CLAMP® – just use an operating tool.

The smart feature:

To open the clamp, the operating tool is inserted vertically. The conductor entry is less than 15 degrees for easier wiring.

Commoning

WAGO Kontakttechnik GmbH & Co. KG
Hansastr. 27
32423 Minden
Phone: +49571 887-0 | Fax: +49571 887-169
Email: info.de@wago.com | Web: www.wago.com

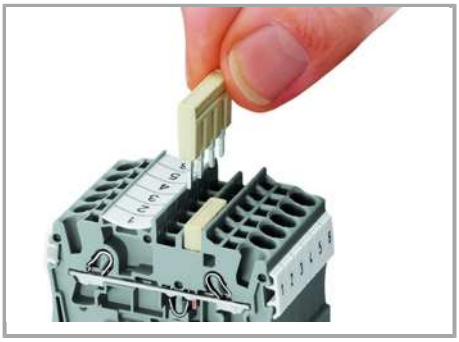

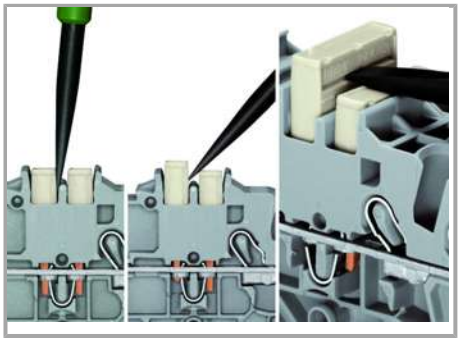

The push-in type jumper bar system is based on the common plug and socket principle. Each terminal block is spring-loaded with a double socket and a resilient CrNi steel spring. The jumper contact material is pure electrolytic copper, which allows for an extremely small design capable of carrying the full-rated current of the terminal block. Ground terminal blocks can also be commoned using the same jumper system. Custom jumpers are created by breaking and removing jumper contacts (2000, 2001, 2002, 2004 Series).

Removing a push-in type jumper bar.

Insert the operating tool between the jumper and and partition wall of the dual jumper slots, then lift up the jumper.

Place the operating tool in the center of jumpers up to five contacts (see above), or alternately on both sides for jumpers with more than five contacts.

Commoning

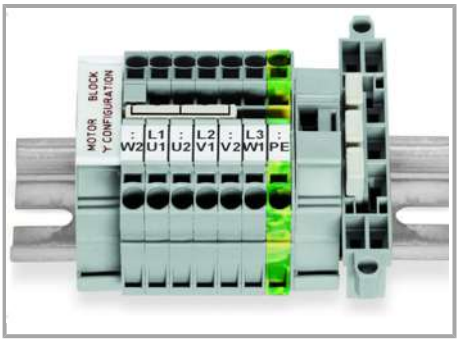

This star point jumper has been specially developed to create a “star point” and is used on motor terminal boards equipped with TOPJOB® S rail-mount terminal blocks.

Commoning

WAGO Kontakttechnik GmbH & Co. KG
Hansastr. 27
32423 Minden
Phone: +49571 887-0 | Fax: +49571 887-169
Email: info.de@wago.com | Web: www.wago.com

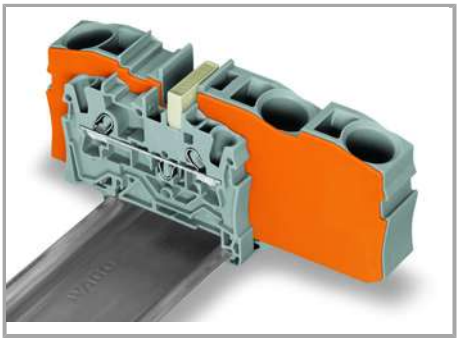

Step-down jumpers may common terminal blocks of different sizes, without losing a conductor clamping point. This can be beneficial on long conductor runs where voltage drops may be problematic. A large conductor can be easily connected to smaller conductors at the distribution point.

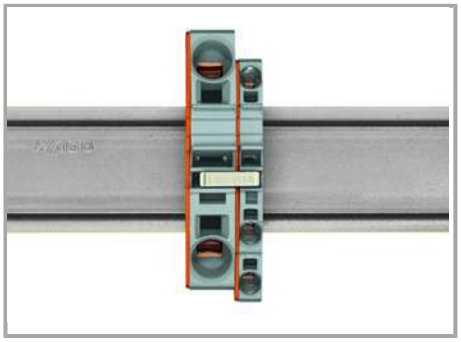

Using step-down jumpers, an end plate must be inserted between the terminal blocks to be commoned.

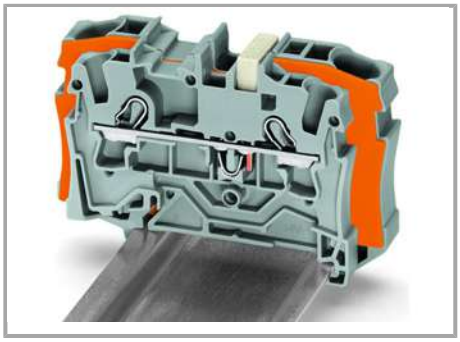

Step-down jumper (2006-499) commons 6 /4 mm² (10/12 AWG) terminal blocks (2006 /2004 Series) with 4/2.5/1.5 mm² (12/14/16 AWG) terminal blocks (2004/2002/2001 Series).

Commoning may be made in either direction using the special thin end plate to cover the open side. Additional through terminal blocks having a smaller cross-section may be commoned using push-in type jumper bars.

Subject to changes. Please also observe the further product documentation!

WAGO Kontakttechnik GmbH & Co. KG
Hansastr. 27
32423 Minden
Phone: +49571 887-0 | Fax: +49571 887-169
Email: info.de@wago.com | Web: www.wago.com

Do you have any questions about our products?
We are always happy to take your call at +49 (571) 887-44222.

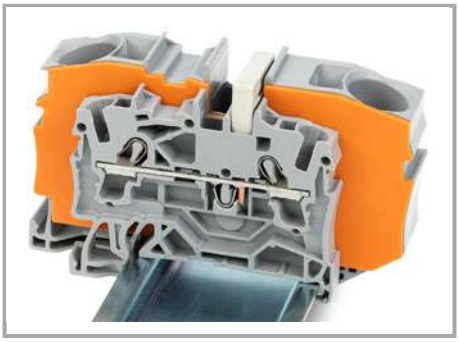

Step-down jumper (2016-499) commons 16 /10 mm² (16/8 AWG) terminal blocks (2016 /2010 Series) with 10/6/4/2.5 mm² (8/10/12 /14 AWG) terminal blocks (2010/2006/2004 /2002 Series).

Stepping down via push-in type jumper bar.

Commoning via open terminal side with end plate allows jumpering over two cross-section sizes for 16 mm² (6 AWG) and 10 mm² (8 AWG) and one cross-section size for 6/4/2.5 mm² (10/12/14 AWG). An example: from 16 mm² (6 AWG) to 6 mm² (10 AWG) (see illustration above) or from 10 mm² (8 AWG) to 4 mm² (12 AWG).

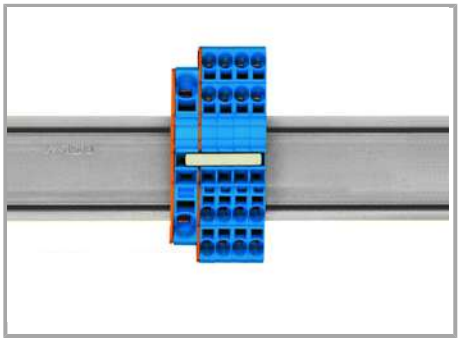

Stepping down via push-in type jumper bar.

Commoning via closed terminal side with end plate allows jumpering over two cross-section sizes, e.g., from 16 mm² (6 AWG) to 6 mm² (10 AWG) or from 6 mm² (10 AWG) to 2.5 mm² (14 AWG) (see illustration above).

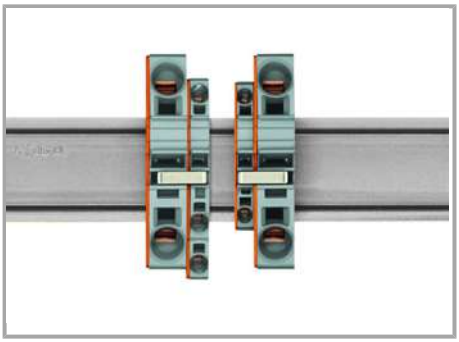

Note:

The total current of the outgoing circuits shall not exceed the nominal current of the step-down jumper/push-in type jumper bar.

Testing

WAGO Kontakttechnik GmbH & Co. KG
Hansastr. 27
32423 Minden
Phone: +49571 887-0 | Fax: +49571 887-169
Email: info.de@wago.com | Web: www.wago.com

The modular TOPJOB® S connectors also connect conductors of the same size as the terminal blocks being used.

TOPJOB® S Connectors with a 2 mm Ø test socket for testing voltage via 2-pole voltage tester

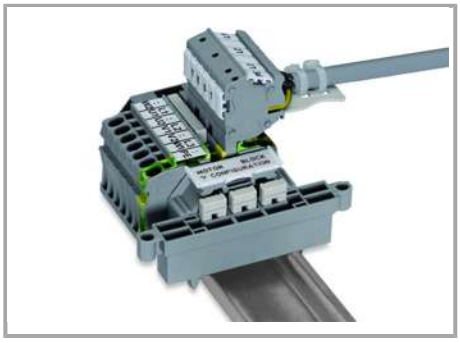

Rail-mount terminal block assembly for electric motor wiring

Test plug adapter (2009-174, CAT I) for 4 mm Ø plugs – compatible with 2000 to 2016 Series

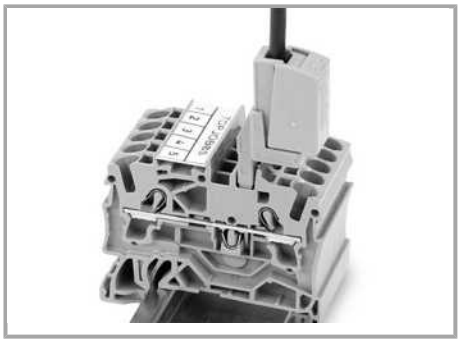

Testing tap (2009-182) for tool-free connection of test cables up to 2.5 mm² (12 AWG) – compatible with 2000 to 2016 Series

Marking

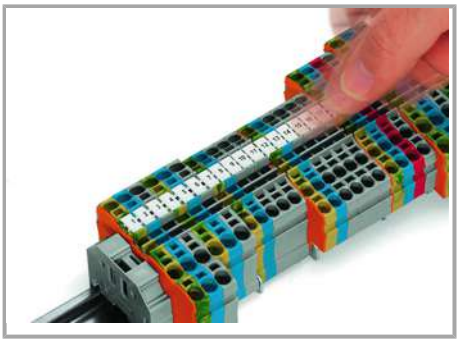

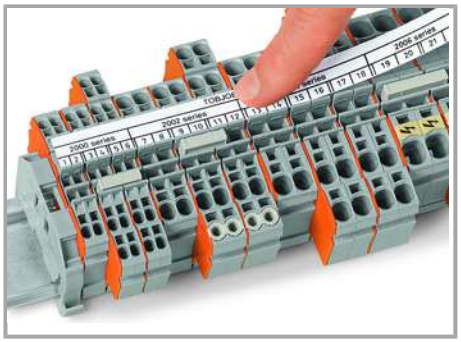

Snapping WMB Inline markers into marker slots.

Subject to changes. Please also observe the further product documentation!

WAGO Kontakttechnik GmbH & Co. KG
Hansastr. 27
32423 Minden
Phone: +49571 887-0 | Fax: +49571 887-169
Email: info.de@wago.com | Web: www.wago.com

Do you have any questions about our products?
We are always happy to take your call at +49 (571) 887-44222.

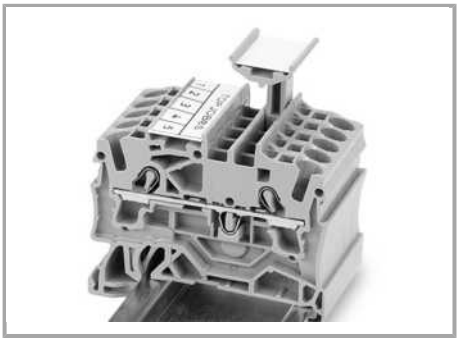

TOPJOB® S 2009-193 Group Marker Carrier (equipped with a marking strip) for all 2001 to 2016 Series TOPJOB® S Rail-Mount Terminal Blocks

Do not use on an end plate!

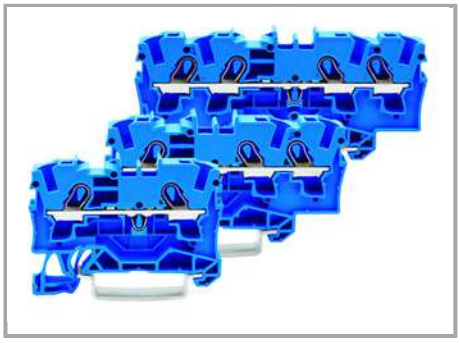

Through terminal blocks with a blue insulated housing are suitable for Ex i applications.

All through and ground conductor terminal blocks are suitable for Ex e II applications.

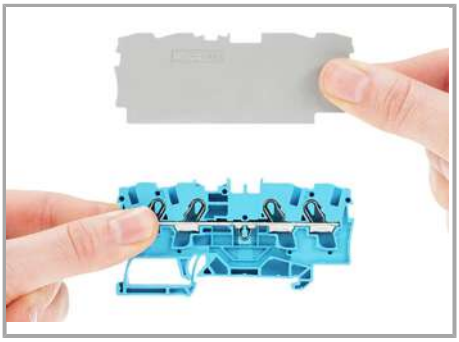

Separator for Ex e/Ex applications

An end plate must be applied to the terminal block located directly behind an Ex e/Ex i separator plate.

Ex e II/Ex i terminal strip

Notice:

The movable feet of terminal blocks and separator plates must face the same direction.

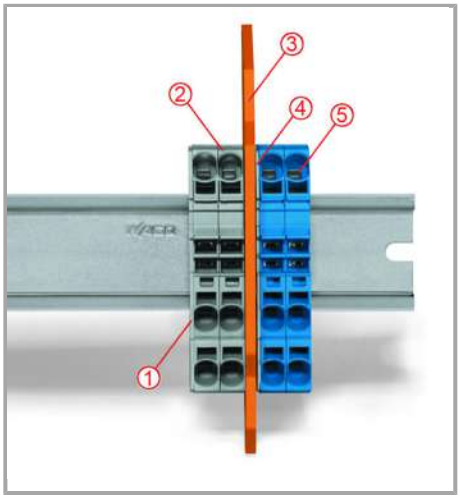

Separator located between Ex e II and Ex i terminal strip

End plate

Ex e II terminal blocks

Separator for Ex e/Ex i applications

End plate

Ex i terminal blocks

According to EN 50020, a minimum distance of 50 mm must be kept between live parts of Ex e and Ex i circuits. The use of Ex e/Ex i separators is a space-saving solution when Ex e and Ex i terminal blocks are mounted on a common carrier rail.

Product family

TOPJOB® S

Subject to changes. Please also observe the further product documentation!

WAGO Kontakttechnik GmbH & Co. KG
Hansastr. 27
32423 Minden
Phone: +49571 887-0 | Fax: +49571 887-169
Email: info.de@wago.com | Web: www.wago.com

Do you have any questions about our products?
We are always happy to take your call at +49 (571) 887-44222.

TOPJOB® S: In various industrial applications and modern building installations, WAGO's wide and versatile range of rail-mount terminal blocks provides more than just reliable electrical connections.

Show all products from the family

Subject to changes. Please also observe the further product documentation!

WAGO Kontakttechnik GmbH & Co. KG
Hansastr. 27
32423 Minden
Phone: +49571 887-0 | Fax: +49571 887-169
Email: info.de@wago.com | Web: www.wago.com

Do you have any questions about our products?
We are always happy to take your call at +49 (571) 887-44222.