1-conductor female plug; 1.5 mm²; 13-pole; 1,50 mm²; gray

www.wago.com/2020-113

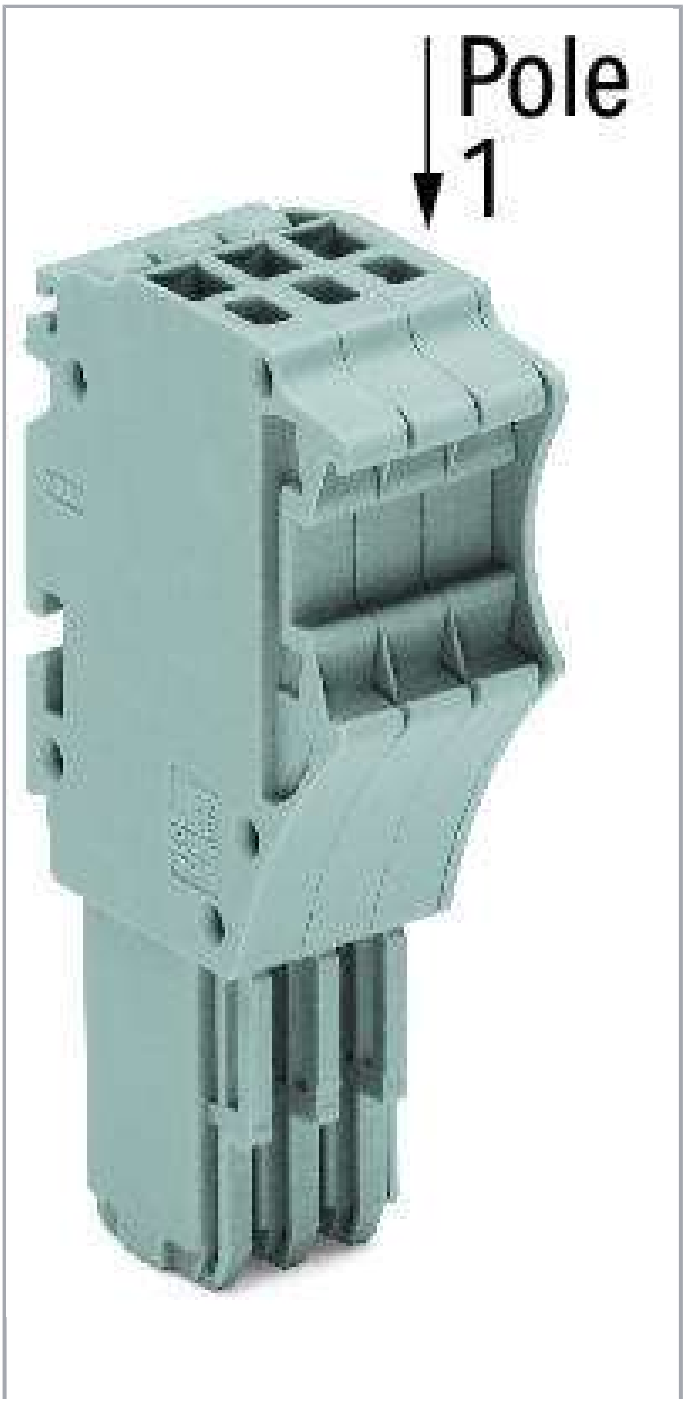

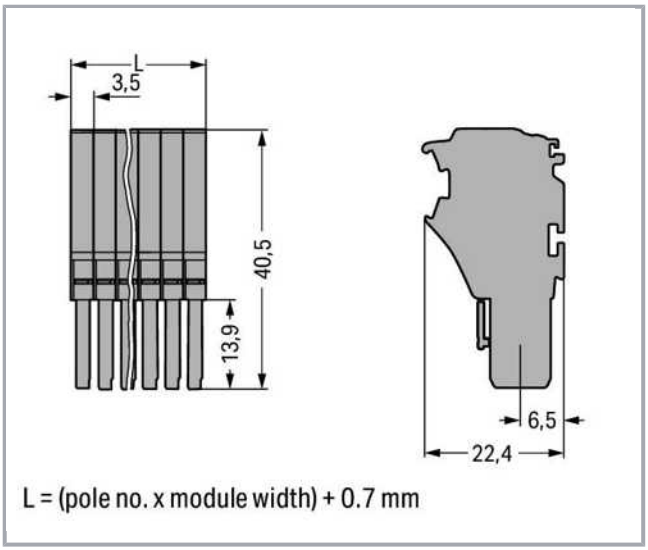

Subject to changes. Please also observe the further product documentation!

WAGO Kontakttechnik GmbH & Co. KG
Hansastr. 27
32423 Minden
Phone: +49571 887-0 | Fax: +49571 887-169
Email: info.de@wago.com | Web: www.wago.com

Do you have any questions about our products?
We are always happy to take your call at +49 (571) 887-44222.

RoHS Compliant BOMcheck.net Color:

Item description

Safety information 1:
According to EN 61984, pluggable connectors without current interrupting capacity shall not be mated and unmated when live or under load.
Safety information 2:
Notice: An appropriate end plate must be applied to the carrier terminal blocks after each female plug.

Data

Electrical data

Ratings per IEC/EN 60664-1

Ratings per	IEC/EN 61984
Rated voltage (III / 3)	500 V
Rated impulse voltage (III / 3)	6 kV
Rated current	13.5 A
Legend (ratings)	(III / 3) ≙ Overvoltage category III / Pollution degree 3

Approvals per UL 1059

Rated voltage UL (Use Group B)	300 V
Rated current UL (Use Group B)	15 A
Rated voltage UL (Use Group C)	300 V
Rated current UL (Use Group C)	15 A
Rated voltage UL (Use Group D)	300 V
Rated current UL (Use Group D)	15 A
Approvals per	UL 1059

Approvals per CSA

Rated voltage CSA (Use Group B)	300 V
Rated current CSA (Use Group B)	10 A
Rated voltage CSA (Use Group C)	300 V
Rated current CSA (Use Group C)	10 A

WAGO Kontakttechnik GmbH & Co. KG
Hansastr. 27
32423 Minden
Phone: +49571 887-0 | Fax: +49571 887-169
Email: info.de@wago.com | Web: www.wago.com

Connection data

Connection technology	Push-in CAGE CLAMP®
Actuation type	Open Tool Slot Push-in
Connectable conductor materials	Copper
Nominal cross section	1 mm²
Solid conductor	0.14 … 1.5 mm² / 24 … 16 AWG
Solid conductor, push-in termination	0.5 … 1.5 mm² / 20 … 16 AWG
Fine-stranded conductor	0.14 … 1.5 mm² / 24 … 16 AWG
Fine-stranded conductor with ferrule with plastic collar	0.5 … 0.75 mm² / 20 … 18 AWG
Fine-stranded conductor with ferrule, push-in termination, from	0.5 … 0.75 mm² / 20 … 18 AWG
Strip length	9 … 11 mm / 0.35 … 0.43 inch
No. of poles	13
Total number of connection points	13
Total number of potentials	13
Type of wiring	Front-entry wiring
Note (conductor cross-section)	Depending on the conductor characteristic, a conductor with a smaller cross section can also be inserted via push-in termination.

Geometrical Data

Width	46.2 mm / 1.819 inch
Height	40.5 mm / 1.594 inch
Depth	22.4 mm / 0.882 inch
Module width	3.5 mm / 0.138 inch

Mechanical data

Marking level	Side marking

Plug connection

Contact type (pluggable connector)	Female connector/socket
Connector connection type	for conductors

Material Data

Color	gray
Insulating material	Polyamide 66 (PA 66)
Fire load	0.52 MJ

Subject to changes. Please also observe the further product documentation!

WAGO Kontakttechnik GmbH & Co. KG
Hansastr. 27
32423 Minden
Phone: +49571 887-0 | Fax: +49571 887-169
Email: info.de@wago.com | Web: www.wago.com

Do you have any questions about our products?
We are always happy to take your call at +49 (571) 887-44222.

Weight	29.3 g

Commercial data

Product Group	18 (X-COM-System)
Packaging type	BOX
Country of origin	DE
GTIN	4045454853655
Customs Tariff No.	85366990990

Approvals / Certificates

Country specific Approvals

Logo	Approval	Additional Approval Text	Certificate name
	CCA DEKRA Certification B.V.	EN 60947	NTR NL 7617
	CSA DEKRA Certification B.V.	C22.2 No. 158	2516073

Ship Approvals

Logo	Approval	Additional Approval Text	Certificate name
	ABS American Bureau of Shipping	EN 60947	20-HG1941090-PDA
	BV Bureau Veritas S.A.	EN 60947	38586/A0 BV

UL-Approvals

Logo	Approval	Additional Approval Text	Certificate name
	UL UL International Germany GmbH	UL 1059	E45172

Subject to changes. Please also observe the further product documentation!

WAGO Kontakttechnik GmbH & Co. KG
Hansastr. 27
32423 Minden
Phone: +49571 887-0 | Fax: +49571 887-169
Email: info.de@wago.com | Web: www.wago.com

Do you have any questions about our products?
We are always happy to take your call at +49 (571) 887-44222.

Counterpart

Compatible products

Marking accessories

	Item no.: 2009-110 Marking strips; on reel; not stretchable; plain; snap-on type; white	www.wago.com/2009-110
	Item no.: 2009-113 WMB-Inline; for Smart Printer; 2300 pieces on roll; plain; snap-on type; white	www.wago.com/2009-113
	Item no.: 2009-113/000-002 WMB-Inline; for Smart Printer; 2300 pieces on roll; plain; snap-on type; yellow	www.wago.com/2009-113/000-002
	Item no.: 2009-113/000-005 WMB-Inline; for Smart Printer; 2300 pieces on roll; plain; snap-on type; red	www.wago.com/2009-113/000-005
	Item no.: 2009-113/000-006 WMB-Inline; for Smart Printer; 2300 pieces on roll; plain; snap-on type; blue	www.wago.com/2009-113/000-006
	Item no.: 2009-113/000-007 WMB-Inline; for Smart Printer; 2300 pieces on roll; plain; snap-on type; gray	www.wago.com/2009-113/000-007
	Item no.: 2009-113/000-012 WMB-Inline; for Smart Printer; 2300 pieces on roll; plain; snap-on type; orange	www.wago.com/2009-113/000-012
	Item no.: 2009-113/000-017 WMB-Inline; for Smart Printer; 2300 pieces on roll; plain; snap-on type; light green	www.wago.com/2009-113/000-017
	Item no.: 2009-113/000-023 WMB-Inline; for Smart Printer; 2300 pieces on roll; plain; snap-on type; green	www.wago.com/2009-113/000-023
	Item no.: 2009-113/000-024 WMB-Inline; for Smart Printer; 2300 pieces on roll; plain; snap-on type; violet	www.wago.com/2009-113/000-024
	Item no.: 210-831	

Subject to changes. Please also observe the further product documentation!

WAGO Kontakttechnik GmbH & Co. KG
Hansastr. 27
32423 Minden
Phone: +49571 887-0 | Fax: +49571 887-169
Email: info.de@wago.com | Web: www.wago.com

Do you have any questions about our products?
We are always happy to take your call at +49 (571) 887-44222.

	Marking strips; on reel; 2.3 mm wide; plain; Self-adhesive; white	www.wago.com/210-831
	Item no.: 210-832 Marking strips; on reel; 3 mm wide; plain; Self-adhesive; white	www.wago.com/210-832
	Item no.: 210-833 Marking strips; on reel; 6 mm wide; plain; Self-adhesive; white	www.wago.com/210-833
	Item no.: 210-834 Marking strips; on reel; 5 mm wide; plain; Self-adhesive; white	www.wago.com/210-834
	Item no.: 793-3501 WMB marking card; as card; plain; snap-on type; white	www.wago.com/793-3501
tools		
	Item no.: 210-647 Operating tool; Blade: 2.5 x 0.4 mm; with a partially insulated shaft	www.wago.com/210-647
	Item no.: 210-648 Operating tool; Blade: 2.5 x 0.4 mm; with a partially insulated shaft; angled; short	www.wago.com/210-648
	Item no.: 210-719 Operating tool; Blade: 2.5 x 0.4 mm; with a partially insulated shaft	www.wago.com/210-719
Locking lever		
	Item no.: 2022-141 Locking lever; can be snapped on 1-conductor female plugs; for 1-pole female plugs; gray	www.wago.com/2022-141
	Item no.: 2022-142 Locking lever; can be snapped on 1-conductor female plugs; for 1-pole female plugs; orange	www.wago.com/2022-142
	Item no.: 2022-151 Locking lever; can be snapped on 1-conductor female plugs; 2 poles and more; gray	www.wago.com/2022-151
	Item no.: 2022-152 Locking lever; can be snapped on 1-conductor female plugs; 2 poles and more; orange	www.wago.com/2022-152
Strain relief plate		
	Item no.: 734-326 Strain relief plate; gray	www.wago.com/734-326
	Item no.: 734-430 Strain relief plate; gray	www.wago.com/734-430
	Item no.: 734-431 Strain relief plate; gray	www.wago.com/734-431
Protective Warning Marker		
	Item no.: 2000-115 Protective warning marker; with high-voltage symbol, black; for 5 terminal blocks; yellow	www.wago.com/2000-115
ferrule		

Subject to changes. Please also observe the further product documentation!

WAGO Kontakttechnik GmbH & Co. KG
Hansastr. 27
32423 Minden
Phone: +49571 887-0 | Fax: +49571 887-169
Email: info.de@wago.com | Web: www.wago.com

Do you have any questions about our products?
We are always happy to take your call at +49 (571) 887-44222.

	Item no.: 216-241 Ferrule; Sleeve for 0.5 mm² / 20 AWG; insulated; electro-tin plated; electrolytic copper; gastight crimped; acc. to DIN 46228, Part 4/09.90; white	www.wago.com/216-241
	Item no.: 216-242 Ferrule; Sleeve for 0.75 mm² / 18 AWG; insulated; electro-tin plated; electrolytic copper; gastight crimped; acc. to DIN 46228, Part 4/09.90; gray	www.wago.com/216-242
	Item no.: 216-243 Ferrule; Sleeve for 1 mm² / AWG 18; insulated; electro-tin plated; electrolytic copper; gastight crimped; acc. to DIN 46228, Part 4/09.90; red	www.wago.com/216-243

Downloads

Documentation

Bid Text

2020-113 GAEB X81 - Datei	Feb 19, 2019	xml 4.0 kB	Download
2020-113 GAEB docx - Datei	Aug 6, 2018	docx 15.4 kB	Download

Additional Information

Technical explanations	Apr 3, 2019	pdf 2.1 MB	Download

CAD/CAE-Data

CAD data

2D/3D Models 2020-113	URL	Download

CAE data

EPLAN Data Portal 2020-113	URL	Download
WSCAD Universe 2020-113	URL	Download

Installation Notes

Coding

Subject to changes. Please also observe the further product documentation!

WAGO Kontakttechnik GmbH & Co. KG
Hansastr. 27
32423 Minden
Phone: +49571 887-0 | Fax: +49571 887-169
Email: info.de@wago.com | Web: www.wago.com

Do you have any questions about our products?
We are always happy to take your call at +49 (571) 887-44222.

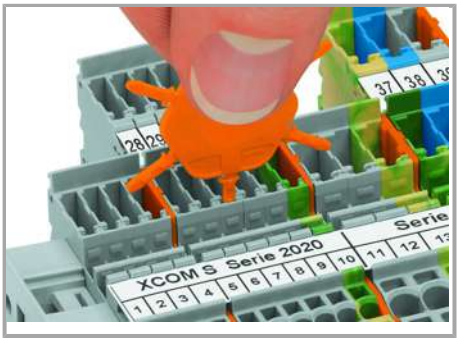

Insert coding pin into the corresponding slot and twist it off.

Coding a female plug: remove coding finger using a suitable tool.

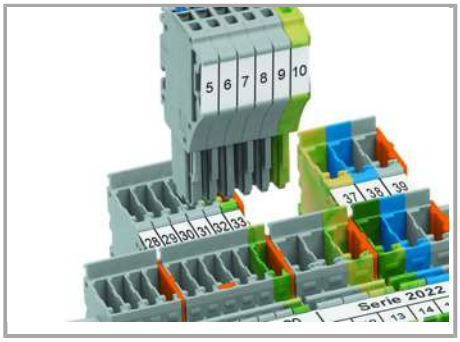

Insert coded female connector into X-COM®S-SYSTEM terminal block assembly.

Locking lever

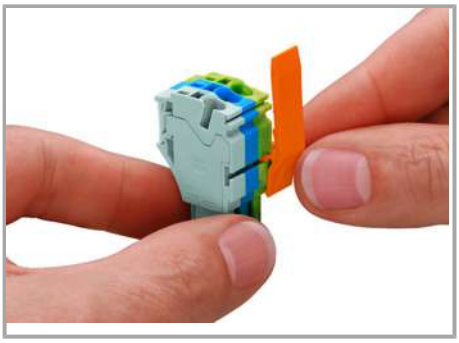

Slide the locking lever into position.

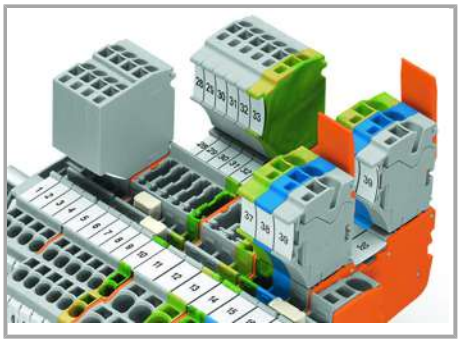

Female plugs can be individually locked.

Product family

X-COM S-Mini
Show all products from the family

Subject to changes. Please also observe the further product documentation!

WAGO Kontakttechnik GmbH & Co. KG
Hansastr. 27
32423 Minden
Phone: +49571 887-0 | Fax: +49571 887-169
Email: info.de@wago.com | Web: www.wago.com

Do you have any questions about our products?
We are always happy to take your call at +49 (571) 887-44222.