2-conductor female connector; 1.5 mm²; 7-pole; 1,50 mm²; gray

www.wago.com/2020-207

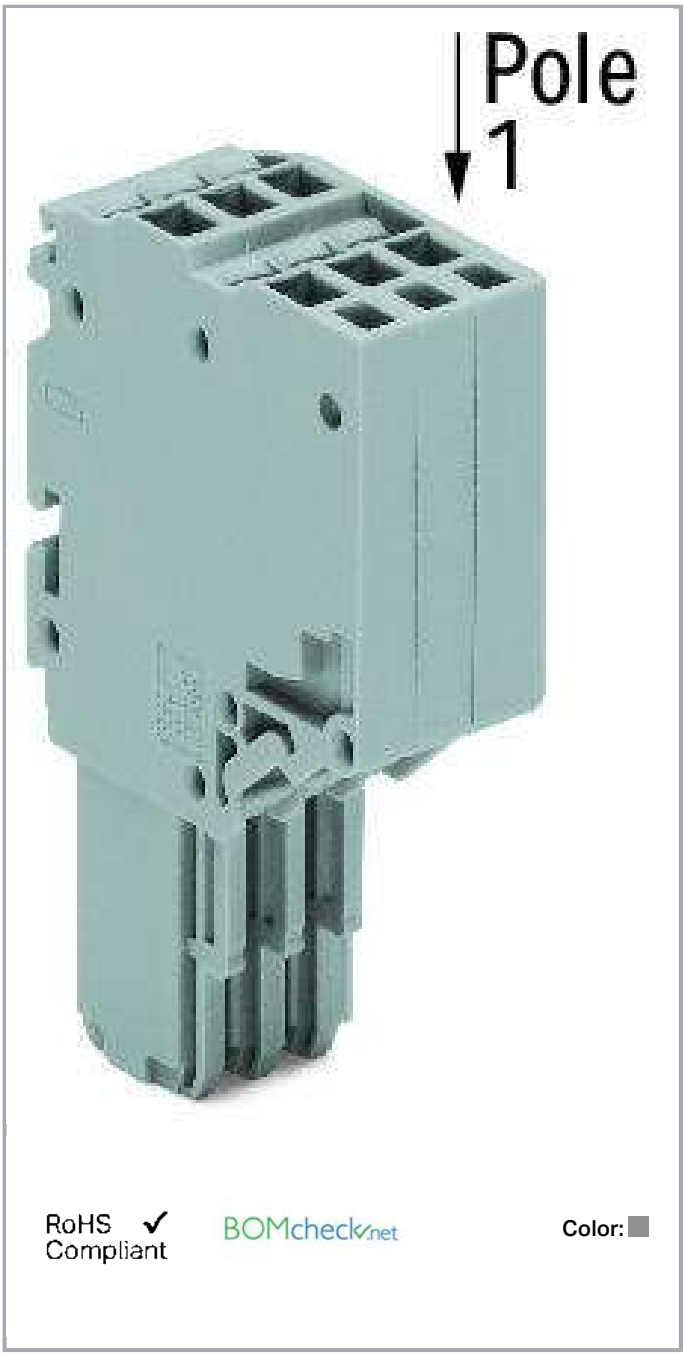

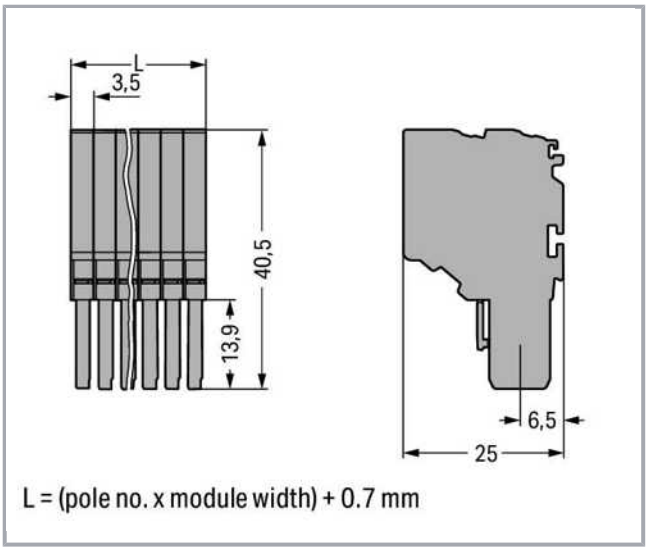

Subject to changes. Please also observe the further product documentation!

WAGO Kontakttechnik GmbH & Co. KG
Hansastr. 27
32423 Minden
Phone: +49571 887-0 | Fax: +49571 887-169
Email: info.de@wago.com | Web: www.wago.com

Do you have any questions about our products?
We are always happy to take your call at +49 (571) 887-44222.

Item description

Safety information 1:
According to EN 61984, pluggable connectors without current interrupting capacity shall not be mated and unmated when live or under load.
Safety information 2:
Notice: An appropriate end plate must be applied to the carrier terminal blocks after each female plug.

Data
Electrical data

Ratings per IEC/EN 60664-1

Ratings per	IEC/EN 61984
Rated voltage (III / 3)	500 V
Rated impulse voltage (III / 3)	6 kV
Rated current	13.5 A
Legend (ratings)	(III / 3) ≙ Overvoltage category III / Pollution degree 3

Approvals per UL 1059

Rated voltage UL (Use Group B)	300 V
Rated current UL (Use Group B)	15 A
Rated voltage UL (Use Group C)	300 V
Rated current UL (Use Group C)	15 A
Rated voltage UL (Use Group D)	300 V
Rated current UL (Use Group D)	15 A
Approvals per	UL 1059

Approvals per CSA

Rated voltage CSA (Use Group B)	300 V
Rated current CSA (Use Group B)	10 A
Rated voltage CSA (Use Group C)	300 V
Rated current CSA (Use Group C)	10 A

Connection data

Connection technology	Push-in CAGE CLAMP®
Actuation type	Open Tool Slot Push-in
Connectable conductor materials	Copper

Subject to changes. Please also observe the further product documentation!

WAGO Kontakttechnik GmbH & Co. KG
Hansastr. 27
32423 Minden
Phone: +49571 887-0 | Fax: +49571 887-169
Email: info.de@wago.com | Web: www.wago.com

Do you have any questions about our products?
We are always happy to take your call at +49 (571) 887-44222.

Nominal cross section	1 mm²
Solid conductor	0.14 … 1.5 mm² / 24 … 16 AWG
Solid conductor, push-in termination	0.5 … 1.5 mm² / 20 … 16 AWG
Fine-stranded conductor	0.14 … 1.5 mm² / 24 … 16 AWG
Fine-stranded conductor with ferrule with plastic collar	0.5 … 0.75 mm² / 20 … 18 AWG
Fine-stranded conductor with ferrule, push-in termination, from	0.5 … 0.75 mm² / 20 … 18 AWG
Strip length	9 … 11 mm / 0.35 … 0.43 inch
No. of poles	7
Total number of connection points	14
Total number of potentials	7
Type of wiring	Front-entry wiring
Note (conductor cross-section)	Depending on the conductor characteristic, a conductor with a smaller cross section can also be inserted via push-in termination.

Geometrical Data

Width	25.2 mm / 0.992 inch
Height	40.5 mm / 1.594 inch
Depth	25 mm / 0.984 inch
Module width	3.5 mm / 0.138 inch

Mechanical data

Marking level	Side marking

Plug connection

Contact type (pluggable connector)	Female connector/socket
Connector connection type	for conductors

Material Data

Color	gray
Insulating material	Polyamide 66 (PA 66)
Fire load	0.324 MJ
Weight	19.5 g

Commercial data

Product Group	18 (X-COM-System)
Packaging type	BOX

Subject to changes. Please also observe the further product documentation!

WAGO Kontakttechnik GmbH & Co. KG
Hansastr. 27
32423 Minden
Phone: +49571 887-0 | Fax: +49571 887-169
Email: info.de@wago.com | Web: www.wago.com

Do you have any questions about our products?
We are always happy to take your call at +49 (571) 887-44222.

Country of origin	DE
GTIN	4045454855291
Customs Tariff No.	85366990990

Approvals / Certificates

Country specific Approvals

Logo	Approval	Additional Approval Text	Certificate name
	CCA DEKRA Certification B.V.	EN 60947	NTR NL 7617
	CSA DEKRA Certification B.V.	C22.2 No. 158	2516073

Ship Approvals

Logo	Approval	Additional Approval Text	Certificate name
	ABS American Bureau of Shipping	EN 60947	20-HG1941090-PDA
	BV Bureau Veritas S.A.	EN 60947	38586/A0 BV
	DNV GL Det Norske Veritas, Germanischer Lloyd	-	TAE00001V2
	LR Lloyds Register	EN 60947	91/20112 (E9)

UL-Approvals

Logo	Approval	Additional Approval Text	Certificate name
	UL UL International Germany GmbH	UL 1059	E45172

Subject to changes. Please also observe the further product documentation!

WAGO Kontakttechnik GmbH & Co. KG
Hansastr. 27
32423 Minden
Phone: +49571 887-0 | Fax: +49571 887-169
Email: info.de@wago.com | Web: www.wago.com

Do you have any questions about our products?
We are always happy to take your call at +49 (571) 887-44222.

Counterpart

Compatible products

Marking accessories

	Item no.: 2009-113 WMB-Inline; for Smart Printer; 2300 pieces on roll; plain; snap-on type; white	www.wago.com/2009-113
	Item no.: 2009-113/000-002 WMB-Inline; for Smart Printer; 2300 pieces on roll; plain; snap-on type; yellow	www.wago.com/2009-113/000-002
	Item no.: 2009-113/000-005 WMB-Inline; for Smart Printer; 2300 pieces on roll; plain; snap-on type; red	www.wago.com/2009-113/000-005
	Item no.: 2009-113/000-006 WMB-Inline; for Smart Printer; 2300 pieces on roll; plain; snap-on type; blue	www.wago.com/2009-113/000-006
	Item no.: 2009-113/000-007 WMB-Inline; for Smart Printer; 2300 pieces on roll; plain; snap-on type; gray	www.wago.com/2009-113/000-007
	Item no.: 2009-113/000-012 WMB-Inline; for Smart Printer; 2300 pieces on roll; plain; snap-on type; orange	www.wago.com/2009-113/000-012
	Item no.: 2009-113/000-017 WMB-Inline; for Smart Printer; 2300 pieces on roll; plain; snap-on type; light green	www.wago.com/2009-113/000-017
	Item no.: 2009-113/000-023 WMB-Inline; for Smart Printer; 2300 pieces on roll; plain; snap-on type; green	www.wago.com/2009-113/000-023
	Item no.: 2009-113/000-024 WMB-Inline; for Smart Printer; 2300 pieces on roll; plain; snap-on type; violet	www.wago.com/2009-113/000-024

Subject to changes. Please also observe the further product documentation!

WAGO Kontakttechnik GmbH & Co. KG
Hansastr. 27
32423 Minden
Phone: +49571 887-0 | Fax: +49571 887-169
Email: info.de@wago.com | Web: www.wago.com

Do you have any questions about our products?
We are always happy to take your call at +49 (571) 887-44222.

	Item no.: 793-3501 WMB marking card; as card; plain; snap-on type; white	www.wago.com/793-3501
tools		
	Item no.: 210-647 Operating tool; Blade: 2.5 x 0.4 mm; with a partially insulated shaft	www.wago.com/210-647
	Item no.: 210-648 Operating tool; Blade: 2.5 x 0.4 mm; with a partially insulated shaft; angled; short	www.wago.com/210-648
	Item no.: 210-719 Operating tool; Blade: 2.5 x 0.4 mm; with a partially insulated shaft	www.wago.com/210-719
Strain relief plate		
	Item no.: 734-329 Strain relief plate; gray	www.wago.com/734-329
Locking lever		
	Item no.: 2022-151 Locking lever; can be snapped on 1-conductor female plugs; 2 poles and more; gray	www.wago.com/2022-151
	Item no.: 2022-152 Locking lever; can be snapped on 1-conductor female plugs; 2 poles and more; orange	www.wago.com/2022-152
ferrule		
	Item no.: 216-241 Ferrule; Sleeve for 0.5 mm² / 20 AWG; insulated; electro-tin plated; electrolytic copper; gastight crimped; acc. to DIN 46228, Part 4/09.90; white	www.wago.com/216-241
	Item no.: 216-242 Ferrule; Sleeve for 0.75 mm² / 18 AWG; insulated; electro-tin plated; electrolytic copper; gastight crimped; acc. to DIN 46228, Part 4/09.90; gray	www.wago.com/216-242
	Item no.: 216-243 Ferrule; Sleeve for 1 mm² / AWG 18; insulated; electro-tin plated; electrolytic copper; gastight crimped; acc. to DIN 46228, Part 4/09.90; red	www.wago.com/216-243
Protective Warning Marker		
	Item no.: 2000-115 Protective warning marker; with high-voltage symbol, black; for 5 terminal blocks; yellow	www.wago.com/2000-115

Downloads

Documentation

Bid Text

2020-207 GAEB X81 - Datei	Feb 19, 2019	xml 4.0 kB	Download

2020-207

Subject to changes. Please also observe the further product documentation!

WAGO Kontakttechnik GmbH & Co. KG
Hansastr. 27
32423 Minden
Phone: +49571 887-0 | Fax: +49571 887-169
Email: info.de@wago.com | Web: www.wago.com

Do you have any questions about our products?
We are always happy to take your call at +49 (571) 887-44222.

2020-207 GAEB docx - Datei	Aug 7, 2018	docx 15.5 kB	Download

Additional Information

Technical explanations	Apr 3, 2019	pdf 2.1 MB	Download

CAD/CAE-Data

CAD data

2D/3D Models 2020-207	URL	Download

CAE data

EPLAN Data Portal 2020-207	URL	Download
WSCAD Universe 2020-207	URL	Download

Installation Notes

Coding

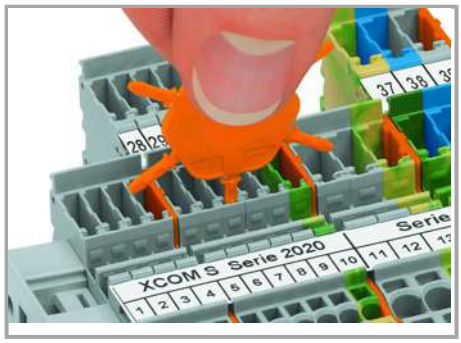

Insert coding pin into the corresponding slot and twist it off.

Coding a female plug: remove coding finger using a suitable tool.

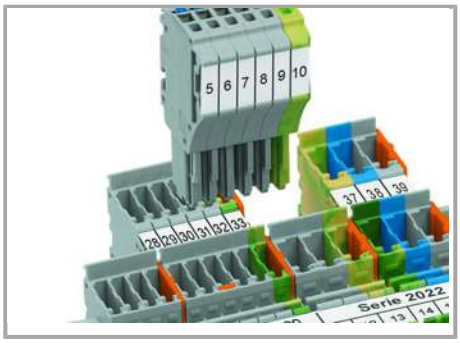

Insert coded female connector into X-COM®S-SYSTEM terminal block assembly.

Locking lever

WAGO Kontakttechnik GmbH & Co. KG
Hansastr. 27
32423 Minden
Phone: +49571 887-0 | Fax: +49571 887-169
Email: info.de@wago.com | Web: www.wago.com

Do you have any questions about our products?
We are always happy to take your call at +49 (571) 887-44222.

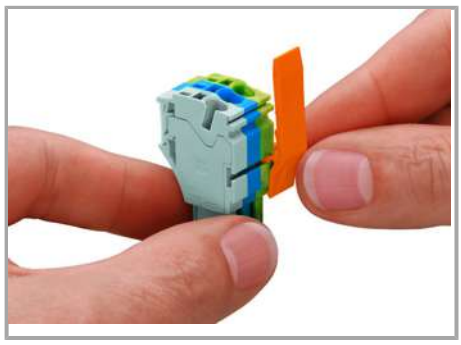

Slide the locking lever into position.

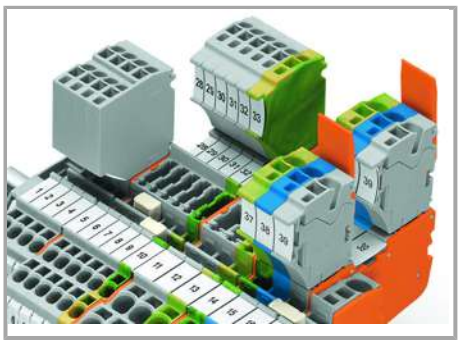

Female plugs can be individually locked.

Product family

X-COM S-Mini
Show all products from the family

Subject to changes. Please also observe the further product documentation!

WAGO Kontakttechnik GmbH & Co. KG
Hansastr. 27
32423 Minden
Phone: +49571 887-0 | Fax: +49571 887-169
Email: info.de@wago.com | Web: www.wago.com

Do you have any questions about our products?
We are always happy to take your call at +49 (571) 887-44222.