Data sheet | Item number: 2086-3108/300-000

THR PCB terminal block; push-button; 1.5 mm²; Pin spacing 5 mm; 8-pole; Push-in CAGE CLAMP®; Solder pin length 1.5 mm; 1,50 mm²; black

www.wago.com/2086-3108_300-000

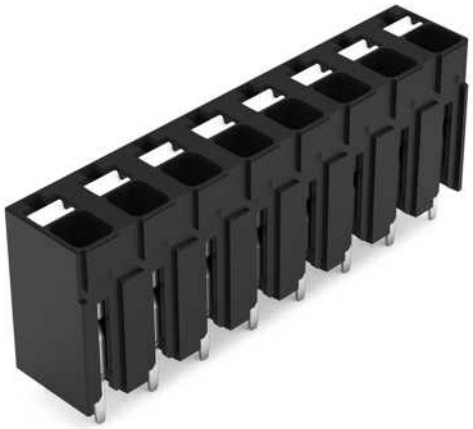

Color:

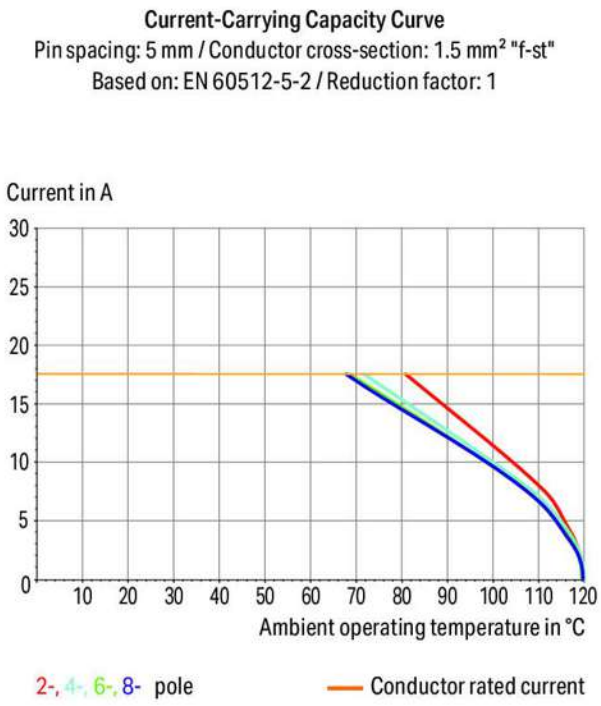

Subject to changes. Please also observe the further product documentation!

WAGO Corporation
Germantown, WI 53022
Phone: 1-800-DIN-RAIL (346-7245) | Fax: (262) 255-6222
Email: info.us@wago.com | Web: www.wago.us

Do you have any questions about our products?
We are always happy to take your call at +49 (571) 887-44222.

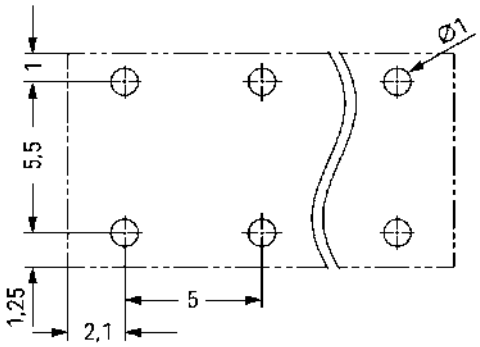

Dimensions in mm
L = (pole no. – 1) x pin spacing + 4.2 mm

Item description

- Ideal for compact device connection, panel feedthrough and tight spaces
- Push-in CAGE CLAMP® allows push-in termination of solid and fine-stranded conductors with ferrules
- SMD and THR variants available
- Delivery in tape-and-reel packaging for full integration into SMT soldering process
- Push-button moves in direction of conductor connection
- Conductor connection and mating direction both parallel and perpendicular to the PCB
- Choice of double pin spacing or alternating pin spacing, 3.5 and 5 mm pin spacing

Subject to changes. Please also observe the further product documentation!

WAGO Corporation
Germantown, WI 53022
Phone: 1-800-DIN-RAIL (346-7245) | Fax: (262) 255-6222
Email: info.us@wago.com | Web: www.wago.us

Do you have any questions about our products?
We are always happy to take your call at +49 (571) 887-44222.

Data
Electrical data

IEC Approvals

Ratings per	IEC/EN 60664-1
Rated voltage (III / 3)	320 V
Rated surge voltage (III/3)	4 kV
Rated voltage (III/2)	320 V
Rated surge voltage (III/2)	4 kV
Nominal voltage (II/2)	630 V
Rated surge voltage (II/2)	4 kV
Rated current	17.5 A
Legend (ratings)	(III / 2) ≙ Overvoltage category III / Pollution degree 2

UL Approvals

Approvals per	UL 1059
Rated voltage UL (Use Group B)	300 V
Rated current UL (Use Group B)	10 A
Rated voltage UL (Use Group C)	300 V
Rated current UL (Use Group C)	10 A
Rated voltage UL (Use Group D)	300 V
Rated current UL (Use Group D)	10 A

CSA Approvals

Approvals per	CSA
Rated voltage CSA (Use Group B)	300 V
Rated current CSA (Use Group B)	10 A
Rated voltage CSA (Use Group D)	300 V
Rated current CSA (Use Group D)	10 A

Connection data

Total number of potentials	8
Number of connection types	1
Number of levels	1

Subject to changes. Please also observe the further product documentation!

WAGO Corporation
Germantown, WI 53022
Phone: 1-800-DIN-RAIL (346-7245) | Fax: (262) 255-6222
Email: info.us@wago.com | Web: www.wago.us

Do you have any questions about our products?
We are always happy to take your call at +49 (571) 887-44222.

Connection 1

Connection technology	Push-in CAGE CLAMP®
Actuation type	Push-button
Solid conductor	0.14 … 1.5 mm² / 24 … 16 AWG
Fine-stranded conductor	0.14 … 1.5 mm² / 24 … 16 AWG
Fine-stranded conductor; with insulated ferrule	0.25 … 0.75 mm²
Fine-stranded conductor; with uninsulated ferrule	0.25 … 1.5 mm²
Strip length	8 … 9 mm / 0.31 … 0.35 inch
Conductor connection direction to PCB	90 °
Number of poles	8

Physical data

Pin spacing	5 mm / 0.197 inch
Width	39.2 mm / 1.543 inch
Height	15.1 mm / 0.594 inch
Height from the surface	13.6 mm / 0.535 inch
Depth	7.8 mm / 0.307 inch
Solder pin length	1.5 mm
Solder pin dimensions	0.3 x 0.8 mm
Plated through-hole diameter (THR)	$1^{(+0.1)}$ mm

PCB contact

PCB Contact	THR
Solder pin arrangement	over the entire terminal strip (in-line)
Number of solder pins per potential	2

Material data

Color	black
Insulation material	Polyphthalamide (PPA GF)
Flammability class per UL94	V0
Clamping spring material	Chrome nickel spring steel (CrNi)
Contact material	Electrolytic copper (E_{Cu})
Contact plating	tin-plated
Fire load	0.143 MJ

Subject to changes. Please also observe the further product documentation!

WAGO Corporation
Germantown, WI 53022
Phone: 1-800-DIN-RAIL (346-7245) | Fax: (262) 255-6222
Email: info.us@wago.com | Web: www.wago.us

Do you have any questions about our products?
We are always happy to take your call at +49 (571) 887-44222.

Weight	4.9 g

Environmental requirements

Limit temperature range	-60 … +105 °C

Commercial data

PU (SPU)	84 Stück
Packaging type	BOX
Country of origin	CH
GTIN	4055144090321
Customs tariff number	85369010000

Approvals / Certificates

Country specific Approvals

Logo	Approval	Additional Approval Text	Certificate name
	CB DEKRA Certification B.V.	IEC 60947-7-4	NL-74022
	CSA DEKRA Certification B.V.	C22.2	80060692
	KEMA/KEUR DEKRA Certification B.V.	EN 60947-7-4	71-119449

UL-Approvals

Logo	Approval	Additional Approval Text	Certificate name
	UL Underwriters Laboratories Inc.	UL 1059	E45172

Optional accessories

Tools

Operating tool

Item no.: 210-719

Subject to changes. Please also observe the further product documentation!

WAGO Corporation
Germantown, WI 53022
Phone: 1-800-DIN-RAIL (346-7245) | Fax: (262) 255-6222
Email: info.us@wago.com | Web: www.wago.us

Do you have any questions about our products?
We are always happy to take your call at +49 (571) 887-44222.

	Operating tool; Blade: 2.5 x 0.4 mm; with a partially insulated shaft	www.wago.com/210-719

Testing accessories

Testing accessories

	Item no.: 735-500 Test pin; 1 mm Ø; with solder connection for test wire	www.wago.com/735-500
	Item no.: 859-500 Test pin; 1 mm Ø; with solder connection for test wire	www.wago.com/859-500

Ferrules

Ferrule

	Item no.: 216-101 Ferrule; Sleeve for 0.5 mm² / AWG 22; uninsulated; electro-tin plated; silver-colored	www.wago.com/216-101
	Item no.: 216-104 Ferrule; Sleeve for 1.5 mm² / AWG 16; uninsulated; electro-tin plated; silver-colored	www.wago.com/216-104
	Item no.: 216-102 Ferrule; Sleeve for 0.75 mm² / AWG 20; uninsulated; electro-tin plated; silver-colored	www.wago.com/216-102
	Item no.: 216-103 Ferrule; Sleeve for 1 mm² / AWG 18; uninsulated; electro-tin plated	www.wago.com/216-103
	Item no.: 216-142 Ferrule; Sleeve for 0.75 mm² / 18 AWG; uninsulated; electro-tin plated; electrolytic copper; gastight crimped; acc. to DIN 46228, Part 1/08.92	www.wago.com/216-142
	Item no.: 216-132 Ferrule; Sleeve for 0.34 mm² / AWG 24; uninsulated; electro-tin plated	www.wago.com/216-132
	Item no.: 216-121 Ferrule; Sleeve for 0.5 mm² / AWG 22; uninsulated; electro-tin plated; silver-colored	www.wago.com/216-121
	Item no.: 216-143 Ferrule; Sleeve for 1 mm² / AWG 18; uninsulated; electro-tin plated; electrolytic copper; gastight crimped; acc. to DIN 46228, Part 1/08.92	www.wago.com/216-143
	Item no.: 216-131 Ferrule; Sleeve for 0.25 mm² / AWG 24; uninsulated; electro-tin plated; silver-colored	www.wago.com/216-131
	Item no.: 216-141 Ferrule; Sleeve for 0.5 mm² / 20 AWG; uninsulated; electro-tin plated; electrolytic copper; gastight crimped; acc. to DIN 46228, Part 1/08.92	www.wago.com/216-141
	Item no.: 216-152 Ferrule; Sleeve for 0.34 mm² / AWG 24; uninsulated; electro-tin plated	www.wago.com/216-152
	Item no.: 216-202 Ferrule; Sleeve for 0.75 mm² / 18 AWG; insulated; electro-tin plated; gray	www.wago.com/216-202
	Item no.: 216-151 Ferrule; Sleeve for 0.25 mm² / AWG 24; uninsulated; electro-tin plated	www.wago.com/216-151
	Item no.: 216-144	

Subject to changes. Please also observe the further product documentation!

WAGO Corporation
Germantown, WI 53022
Phone: 1-800-DIN-RAIL (346-7245) | Fax: (262) 255-6222
Email: info.us@wago.com | Web: www.wago.us

Do you have any questions about our products?
We are always happy to take your call at +49 (571) 887-44222.

	Ferrule; Sleeve for 1.5 mm² / AWG 16; uninsulated; electro-tin plated; electrolytic copper; gastight crimped; acc. to DIN 46228, Part 1/08.92; silver-colored	www.wago.com/216-144
	Item no.: 216-201 Ferrule; Sleeve for 0.5 mm² / 20 AWG; insulated; electro-tin plated; white	www.wago.com/216-201
	Item no.: 216-241 Ferrule; Sleeve for 0.5 mm² / 20 AWG; insulated; electro-tin plated; electrolytic copper; gastight crimped; acc. to DIN 46228, Part 4/09.90; white	www.wago.com/216-241
	Item no.: 216-242 Ferrule; Sleeve for 0.75 mm² / 18 AWG; insulated; electro-tin plated; electrolytic copper; gastight crimped; acc. to DIN 46228, Part 4/09.90; gray	www.wago.com/216-242
	Item no.: 216-301 Ferrule; Sleeve for 0.25 mm² / AWG 24; insulated; electro-tin plated; yellow	www.wago.com/216-301
	Item no.: 216-302 Ferrule; Sleeve for 0.34 mm² / 22 AWG; insulated; electro-tin plated; green	www.wago.com/216-302

Downloads

Documentation

Additional Information

Technical explanations	2019 Apr 3	pdf 2.0 MB	Download
THR Soldering Process		pdf 548.2 kB	Download

CAD files

CAD data

2D/3D Models 2086-3108/300-000	URL	Download

CAE data

ZUKEN Portal 2086-3108/300-000	URL	Download

Environmental Product Compliance

Compliance Search

Environmental Product Compliance 2086-3108/300-000 THR PCB terminal block; push-button; 1.5 mm²; Pin spacing 5 mm; 8-pole; Push-in CAGE CLAMP®; Solder pin length 1.5 mm; 1,50 mm²; black	URL	Download

Subject to changes. Please also observe the further product documentation!

WAGO Corporation
Germantown, WI 53022
Phone: 1-800-DIN-RAIL (346-7245) | Fax: (262) 255-6222
Email: info.us@wago.com | Web: www.wago.us

Do you have any questions about our products?
We are always happy to take your call at +49 (571) 887-44222.

Installation Notes

Conductor termination

Inserting solid conductor via push-in termination.

Conductor removal

Removing fine-stranded conductors via push-buttons.

Conductor termination

WAGO Corporation
Germantown, WI 53022
Phone: 1-800-DIN-RAIL (346-7245) | Fax: (262) 255-6222
Email: info.us@wago.com | Web: www.wago.us

Do you have any questions about our products?
We are always happy to take your call at +49 (571) 887-44222.

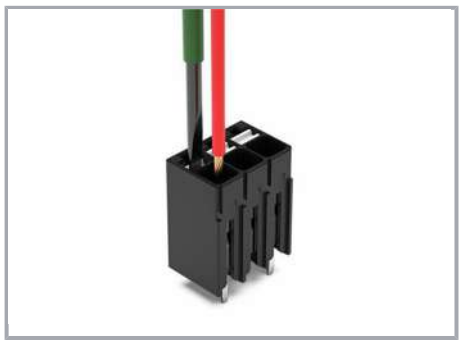

Inserting and removing fine-stranded conductors via push-buttons.

Testing

Testing via 1 mm Ø test pin.

Touch contact with current bar.

Marking

Pole marking via direct marking perpendicular to conductor entry.

Subject to changes. Please also observe the further product documentation!

WAGO Corporation
Germantown, WI 53022
Phone: 1-800-DIN-RAIL (346-7245) | Fax: (262) 255-6222
Email: info.us@wago.com | Web: www.wago.us

Do you have any questions about our products?
We are always happy to take your call at +49 (571) 887-44222.