THT male header; 1.0 mm Ø solder pin; angled; Pin spacing 3.5 mm; 4-pole; light gray

www.wago.com/2091-1424

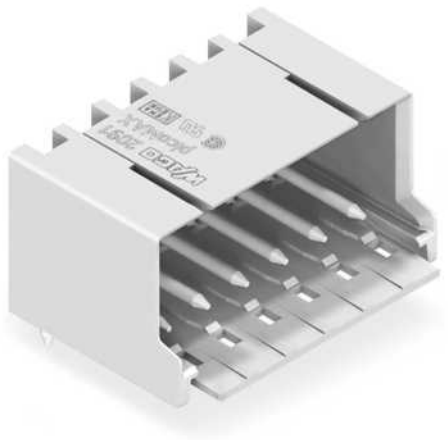

RoHS ✓ Compliant

BOMcheck.net

Color:

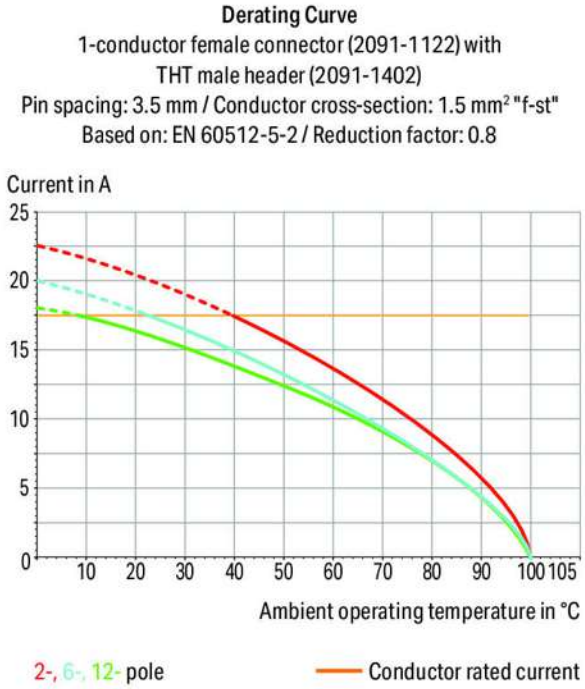

Subject to changes. Please also observe the further product documentation!

WAGO Kontakttechnik GmbH & Co. KG
Hansastr. 27
32423 Minden
Phone: +49571 887-0 | Fax: +49571 887-169
Email: info.de@wago.com | Web: www.wago.com

Do you have any questions about our products?
We are always happy to take your call at +49 (571) 887-44222.

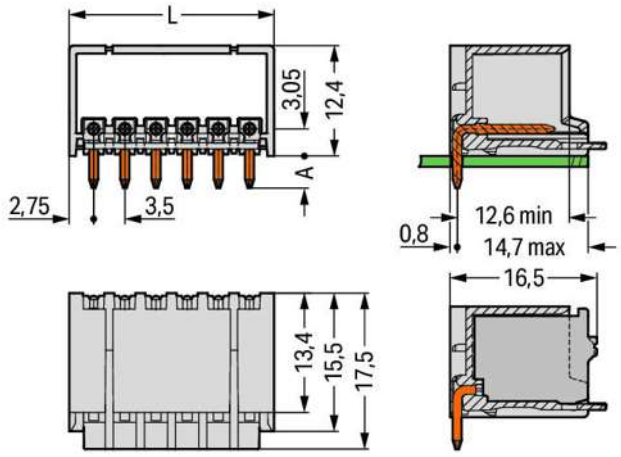

L = (pole number x pin spacing) + 2.0 mm

A = 3.6 mm THT solder pin

A = 2.4 mm THR solder pin

Item description

- Assembly of female connectors without loss of poles, allowing different functions to be divided within one male header
- Coding pins inserted into the header interface prevent mismating, allowing subsequent coding in panel feedthrough applications
- The female connector is fully shrouded by the male header's housing, providing vibration resistance up to 20 g

Safety information 1:

The **picoMAX® Pluggable Connection System** includes connectors without breaking capacity in accordance with DIN EN 61984. When used as intended, these connectors must not be connected/disconnected when live or under load. The circuit design should ensure header pins, which can be touched, are not live when unmated.

Data
Electrical data

Ratings per IEC/EN 60664-1

Ratings per	IEC/EN 60664-1
Rated voltage (III / 3)	160 V
Rated impulse voltage (III / 3)	2.5 kV

Subject to changes. Please also observe the further product documentation!

WAGO Kontakttechnik GmbH & Co. KG
Hansastr. 27
32423 Minden
Phone: +49571 887-0 | Fax: +49571 887-169
Email: info.de@wago.com | Web: www.wago.com

Do you have any questions about our products?
We are always happy to take your call at +49 (571) 887-44222.

Rated voltage (III / 2)	160 V
Rated impulse voltage (III / 2)	2.5 kV
Rated voltage (II / 2)	320 V
Rated impulse voltage (II / 2)	2.5 kV
Rated current	10 A
Legend (ratings)	(III / 2) ≙ Overvoltage category III / Pollution degree 2

Approvals per UL 1059

Rated voltage UL (Use Group B)	300 V
Rated current UL (Use Group B)	10 A
Rated voltage UL (Use Group D)	300 V
Rated current UL (Use Group D)	10 A
Approvals per	UL 1059

Connection data

No. of poles	4
Total number of potentials	4
Number of connection types	1
Number of levels	1

Geometrical Data

Pin spacing	3,5 mm / 0.138 inch
Width	16 mm / 0.63 inch
Height	16 mm / 0.63 inch
Height from the surface	12,4 mm / 0.488 inch
Depth	17,5 mm / 0.689 inch
Solder pin length	3.6 mm
Solder pin diameter	1 mm
Drilled hole diameter (tolerance)	$1{,}2^{(+0{,}1)}$ mm

Plug connection

Contact type (pluggable connector)	Male connector/plug
Connector connection type	for PCB
Mismating protection	No
Mating direction to the PCB	0 °
Locking of plug-in connection	Locking latch

Subject to changes. Please also observe the further product documentation!

WAGO Kontakttechnik GmbH & Co. KG
Hansastr. 27
32423 Minden
Phone: +49571 887-0 | Fax: +49571 887-169
Email: info.de@wago.com | Web: www.wago.com

Do you have any questions about our products?
We are always happy to take your call at +49 (571) 887-44222.

PCB contact

PCB contact	THT

Material Data

Color	light gray
Material group	I
Insulating material	Polyphthalamide (PPA GF)
Flammability class per UL94	V0
Contact material	Electrolytic copper (E_{Cu})
Contact plating	tin-plated
Fire load	0.033 MJ
Weight	1.7 g

Environmental Requirements

Limit temperature range	-60 … +100 °C

Commercial data

Product Group	26 (picoMAX)
Packaging type	BOX
Country of origin	DE
GTIN	4050821161097
Customs Tariff No.	85366990990

Approvals / Certificates

Country specific Approvals

Logo	Approval	Additional Approval Text	Certificate name
	CSA DEKRA Certification B.V.	C22.2	2362521

UL-Approvals

Logo	Approval	Additional Approval Text	Certificate name
	UL Underwriters Laboratories Inc.	UL 1977	20190909-E45171

Subject to changes. Please also observe the further product documentation!

WAGO Kontakttechnik GmbH & Co. KG
Hansastr. 27
32423 Minden
Phone: +49571 887-0 | Fax: +49571 887-169
Email: info.de@wago.com | Web: www.wago.com

Do you have any questions about our products?
We are always happy to take your call at +49 (571) 887-44222.

Counterpart

Item no.2091-1104
1-conductor female plug; Gripping plate; 1.5 mm²; Pin spacing 3.5 mm; 4-pole; 1,50 mm²; light gray

www.wago.com/2091-1104

Item no.2091-1104/000-5000
1-conductor female plug; Gripping plate; direct marking; 1.5 mm²; Pin spacing 3.5 mm; 4-pole; 1,50 mm²; light gray

www.wago.com/2091-1104/000-5000

Item no.2091-1104/000-1000
1-conductor female plug; Gripping plate; direct marking; 1.5 mm²; Pin spacing 3.5 mm; 4-pole; 1,50 mm²; light gray

www.wago.com/2091-1104/000-1000

Item no.2091-1104/002-000
1-conductor female plug; Gripping plate sliding connector release; 1.5 mm²; Pin spacing 3.5 mm; 4-pole; 1,50 mm²; light gray

www.wago.com/2091-1104/002-000

Item no.2091-1124
1-conductor female plug; 1.5 mm²; Pin spacing 3.5 mm; 4-pole; 1,50 mm²; light gray

www.wago.com/2091-1124

Item no.2091-1104/002-1000
1-conductor female plug; Gripping plate sliding connector release; direct marking; 1.5 mm²; Pin spacing 3.5 mm; 4-pole; 1,50 mm²; light gray

www.wago.com/2091-1104/002-1000

Compatible products

Coding

Item no.: 2091-1610
Coding key carrier; suitable for 3.5 mm pin spacing; orange

www.wago.com/2091-1610

Subject to changes. Please also observe the further product documentation!

WAGO Kontakttechnik GmbH & Co. KG
Hansastr. 27
32423 Minden
Phone: +49571 887-0 | Fax: +49571 887-169
Email: info.de@wago.com | Web: www.wago.com

Do you have any questions about our products?
We are always happy to take your call at +49 (571) 887-44222.

Downloads

Documentation

Additional Information

Technical explanations	Apr 3, 2019	pdf 3.6 MB	Download

CAD/CAE-Data

CAD data

2D/3D Models 2091-1424	URL	Download

PCB Design

Symbol and Footprint 2091-1424	URL	Download

CAx data for your PCB design, consisting of "schematic symbols and PCB footprints", allow easy integration of the WAGO component into your development environment.

Supported formats:

- Accel EDA 14 & 15
- Altium 6 to current version
- Cadence Allegro
- DesignSpark
- Eagle Libraries
- KiCad
- Mentor Graphics BoardStation
- Mentor Graphics Design Architect
- Mentor Graphics Design Expedition 99 and 2000
- OrCAD 9.X PCB and Capture
- PADS PowerPCB 3, 3.5, 4.X, and 5.X
- PADS PowerPCB and PowerLogic 3.0
- PCAD 2000, 2001, 2002, 2004, and 2006
- Pulsonix 8.5 or newer
- STL
- 3D STEP
- TARGET 3001!
- View Logic ViewDraw
- Quadcept
- Zuken CadStar 3 and 4

Subject to changes. Please also observe the further product documentation!

WAGO Kontakttechnik GmbH & Co. KG
Hansastr. 27
32423 Minden
Phone: +49571 887-0 | Fax: +49571 887-169
Email: info.de@wago.com | Web: www.wago.com

Do you have any questions about our products?
We are always happy to take your call at +49 (571) 887-44222.

- Zuken CR-5000 and CR-8000

PCB Component Libraries (EDA), PCB CAD Library Ultra Librarian

Installation Notes

Coding

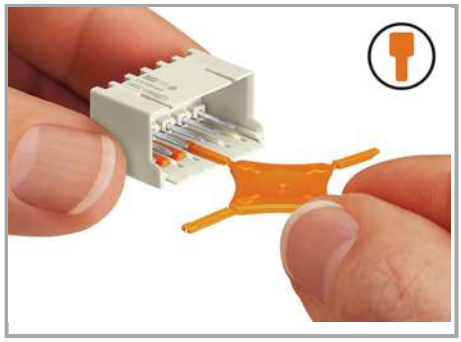

Coding a male header (via coding key carrier and two keys for male header, see symbol).

Product family

picoMAX
Show all products from the family

Subject to changes. Please also observe the further product documentation!

WAGO Kontakttechnik GmbH & Co. KG
Hansastr. 27
32423 Minden
Phone: +49571 887-0 | Fax: +49571 887-169
Email: info.de@wago.com | Web: www.wago.com

Do you have any questions about our products?
We are always happy to take your call at +49 (571) 887-44222.