Data sheet | Item number: 2091-1532/020-000

1-conductor male connector; Snap-in mounting feet; Integrated release lever; 1.5 mm²; Pin spacing 3.5 mm; 12-pole; 1,50 mm²; light gray

www.wago.com/2091-1532_020-000

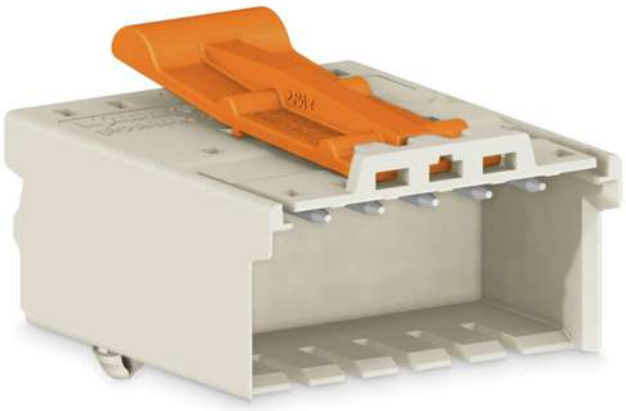

RoHS ✓ Compliant

BOMcheck.net

Color:

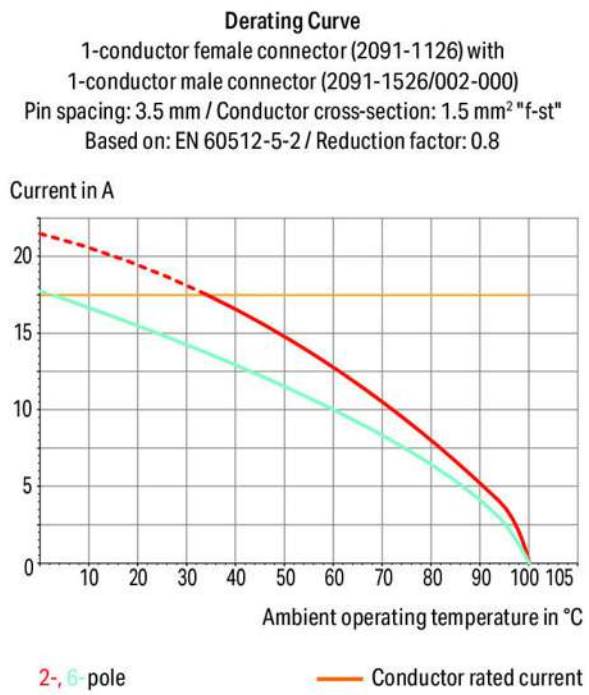

Subject to changes. Please also observe the further product documentation!

WAGO Kontakttechnik GmbH & Co. KG
Hansastr. 27
32423 Minden
Phone: +49571 887-0 | Fax: +49571 887-169
Email: info.de@wago.com | Web: www.wago.com

Do you have any questions about our products?
We are always happy to take your call at +49 (571) 887-44222.

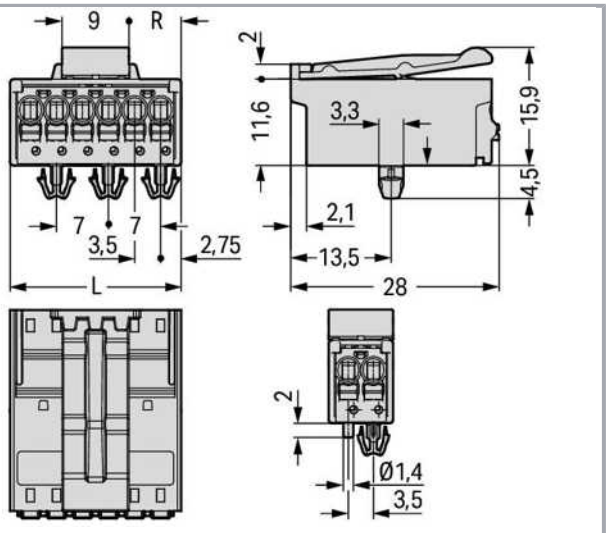

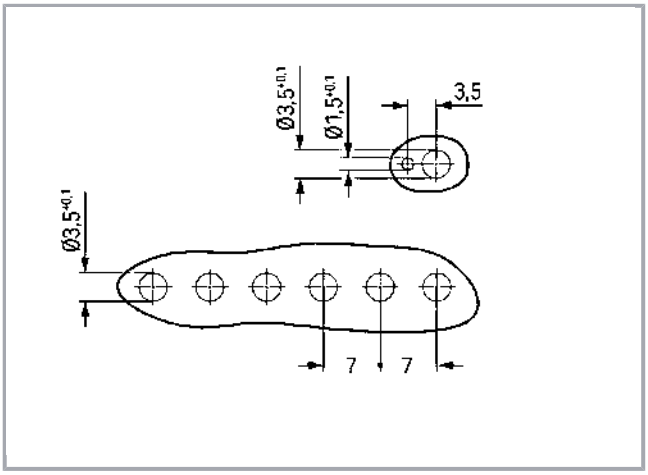

L = (pole no. + pin spacing) + 2 mm

Even pole numbers: R = (L – 9 mm): 2

Odd pole numbers: R = (L – 12.5 mm): 2

Item description

- Universal connection for all conductor types
- Simple, push-in termination of solid and ferruled conductors
- Easy-to-use design does not require special tools
- Testing parallel to conductor entry – tip contact
- For “wire-to-wire” and “board-to-wire” connections
- Integrated release lever

Safety information 1:

The **picoMAX® Pluggable Connection System** includes connectors without breaking capacity in accordance with DIN EN 61984. When used as intended, these connectors must not be connected/disconnected when live or under load. The circuit design should ensure header pins, which can be touched, are not live when unmated.

Data

Electrical data

Subject to changes. Please also observe the further product documentation!

WAGO Kontakttechnik GmbH & Co. KG
Hansastr. 27
32423 Minden
Phone: +49571 887-0 | Fax: +49571 887-169
Email: info.de@wago.com | Web: www.wago.com

Do you have any questions about our products?
We are always happy to take your call at +49 (571) 887-44222.

Ratings per IEC/EN 60664-1

Ratings per	IEC/EN 60664-1
Rated voltage (III / 3)	160 V
Rated impulse voltage (III / 3)	2.5 kV
Rated voltage (III / 2)	160 V
Rated impulse voltage (III / 2)	2.5 kV
Rated voltage (II / 2)	320 V
Rated impulse voltage (II / 2)	2.5 kV
Rated current	10 A
Legend (ratings)	(III / 2) ≙ Overvoltage category III / Pollution degree 2

Approvals per UL 1059

Rated voltage UL (Use Group B)	300 V
Rated current UL (Use Group B)	10 A
Rated voltage UL (Use Group D)	300 V
Rated current UL (Use Group D)	10 A
Approvals per	UL 1059

Connection data

Connection technology	Push-in CAGE CLAMP®
Actuation type	Push-button
Solid conductor	0,2 … 1,5 mm² / 24 … 14 AWG
Fine-stranded conductor	0,2 … 1,5 mm² / 24 … 14 AWG
Fine-stranded conductor with ferrule with plastic collar	0,25 … 0,75 mm²
Fine-stranded conductor with ferrule without plastic collar	0,25 … 1,5 mm²
Strip length	8 … 9 mm / 0.31 … 0.35 inch
No. of poles	12
Total number of connection points	12
Total number of potentials	12
Number of connection types	1
Number of levels	1

Geometrical Data

Pin spacing	3,5 mm / 0.138 inch
Width	44 mm / 1.732 inch
Height	20,4 mm / 0.803 inch

Subject to changes. Please also observe the further product documentation!

WAGO Kontakttechnik GmbH & Co. KG
Hansastr. 27
32423 Minden
Phone: +49571 887-0 | Fax: +49571 887-169
Email: info.de@wago.com | Web: www.wago.com

Do you have any questions about our products?
We are always happy to take your call at +49 (571) 887-44222.

Depth	28 mm / 1.102 inch

Mechanical data

Mounting type	Snap-in mounting foot

Plug connection

Contact type (pluggable connector)	Male connector/plug
Connector connection type	for conductor
Mismating protection	No
Locking of plug-in connection	Locking latch

Material Data

Color	light gray
Material group	I
Insulating material	Polyphthalamide (PPA GF)
Flammability class per UL94	V0
Clamping spring material	Chrome nickel spring steel (CrNi)
Contact material	Electrolytic copper (E_{Cu})
Contact plating	tin-plated
Weight	11.5 g

Environmental Requirements

Limit temperature range	-60 … +100 °C

Commercial data

Packaging type	BOX
Country of origin	DE
GTIN	4055143543484
Customs Tariff No.	85366990990

Approvals / Certificates

Country specific Approvals

Logo	Approval	Additional Approval Text	Certificate name
	CSA DEKRA Certification B.V.	C22.2	2362521

Subject to changes. Please also observe the further product documentation!

WAGO Kontakttechnik GmbH & Co. KG
Hansastr. 27
32423 Minden
Phone: +49571 887-0 | Fax: +49571 887-169
Email: info.de@wago.com | Web: www.wago.com

Do you have any questions about our products?
We are always happy to take your call at +49 (571) 887-44222.

UL-Approvals

Logo	Approval	Additional Approval Text	Certificate name
	UL Underwriters Laboratories Inc.	UL 1977	20190909-E45171

Counterpart

Item no.2091-1132
1-conductor female plug; 1.5 mm²; Pin spacing 3.5 mm; 12-pole; 1,50 mm²; light gray

www.wago.com/2091-1132

Compatible products

Coding

Item no.: 2091-1610
Coding key carrier; suitable for 3.5 mm pin spacing; orange

www.wago.com/2091-1610

Downloads

Documentation

Additional Information

Technical explanations	Apr 3, 2019	pdf 3.6 MB	Download

CAD/CAE-Data

CAD data

2D/3D Models 2091-1532/020-000	URL	Download

Installation Notes

Subject to changes. Please also observe the further product documentation!

WAGO Kontakttechnik GmbH & Co. KG
Hansastr. 27
32423 Minden
Phone: +49571 887-0 | Fax: +49571 887-169
Email: info.de@wago.com | Web: www.wago.com

Do you have any questions about our products?
We are always happy to take your call at +49 (571) 887-44222.

Product family

picoMAX
Show all products from the family

Subject to changes. Please also observe the further product documentation!

WAGO Kontakttechnik GmbH & Co. KG
Hansastr. 27
32423 Minden
Phone: +49571 887-0 | Fax: +49571 887-169
Email: info.de@wago.com | Web: www.wago.com

Do you have any questions about our products?
We are always happy to take your call at +49 (571) 887-44222.