Data sheet | Item number: 2091-1702

THT male header; 1.0 mm Ø solder pin; straight; Pin spacing 3.5 mm; 2-pole; black

www.wago.com/2091-1702

Picture differs from the item.

Color:

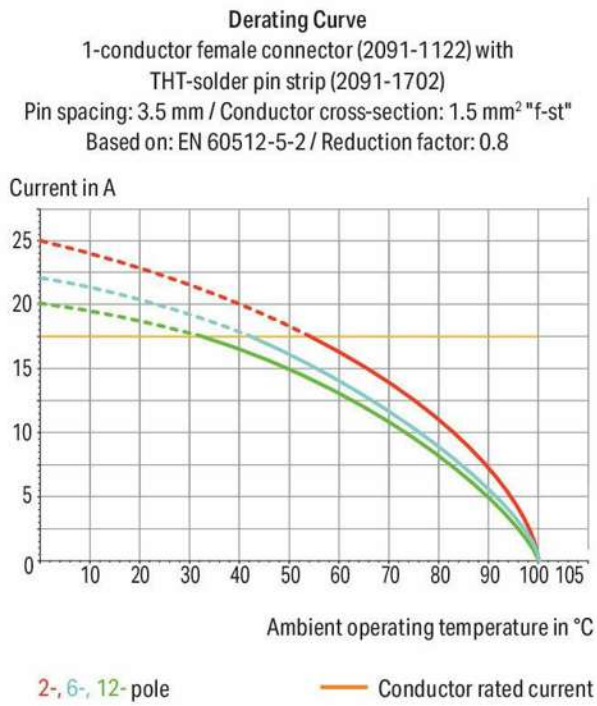

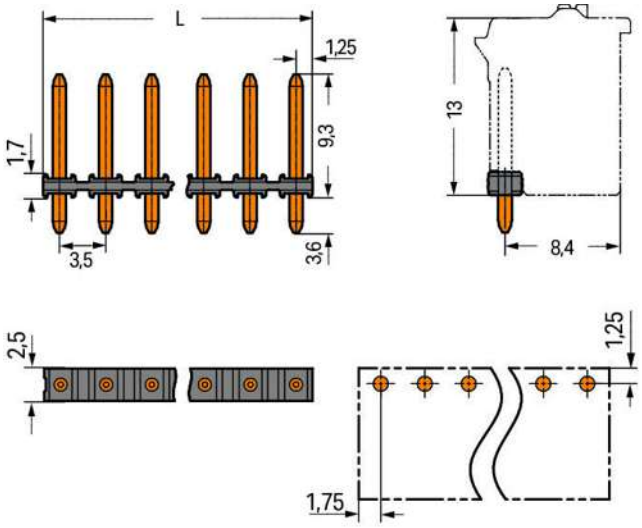

L = (pole no. – 1) x pin spacing + 2.5 mm

Subject to changes. Please also observe the further product documentation!

WAGO Corporation
Germantown, WI 53022
Phone: 1-800-DIN-RAIL (346-7245) | Fax: (262) 255-6222
Email: info.us@wago.com | Web: www.wago.us

Do you have any questions about our products?
We are always happy to take your call at +49 (571) 887-44222.

Item description

- Lötstiftleisten mit geraden und abgewinkelten Lötstiften für rechtwinklige und parallele Steckrichtung zur Leiterplatte
- Polverlustfreies Aneinanderreihen von mehreren Federleisten in einer Lötstiftleiste zur Trennung von Funktionen möglich

Data
Notes

Safety information 1	The **picoMAX® Pluggable Connection System** includes connectors without breaking capacity in accordance with DIN EN 61984. When used as intended, these connectors must not be connected /disconnected when live or under load. The circuit design should ensure header pins, which can be touched, are not live when unmated.

Electrical data

IEC Approvals

Ratings per	IEC/EN 60664-1
Rated voltage (III / 3)	160 V
Rated surge voltage (III/3)	2.5 kV
Rated voltage (III/2)	160 V
Rated surge voltage (III/2)	2.5 kV
Nominal voltage (II/2)	320 V
Rated surge voltage (II/2)	2.5 kV
Rated current	10 A
Legend (ratings)	(III / 2) ≙ Overvoltage category III / Pollution degree 2

Connection data

Number of connection types	1
Number of levels	1

Connection 1

Number of poles	2

Physical data

Pin spacing	3.5 mm / 0.138 inch

Subject to changes. Please also observe the further product documentation!

WAGO Corporation
Germantown, WI 53022
Phone: 1-800-DIN-RAIL (346-7245) | Fax: (262) 255-6222
Email: info.us@wago.com | Web: www.wago.us

Do you have any questions about our products?
We are always happy to take your call at +49 (571) 887-44222.

Width	8.5 mm / 0.335 inch
Height	12.9 mm / 0.508 inch
Height from the surface	9.3 mm / 0.366 inch
Depth	2.5 mm / 0.098 inch
Solder pin length	3.6 mm
Solder pin diameter	1 mm
Drilled hole diameter with tolerance	$1.2^{(+0.1)}$ mm

Plug-in connection

Contact type (pluggable connector)	Male connector/plug
Connector (connection type)	for PCB
Mismating protection	No
Mating direction to the PCB	90 °
Locking of plug-in connection	Without

PCB contact

PCB Contact	THT

Material data

Color	black
Material group	I
Insulation material	Polyphthalamide (PPA GF)
Flammability class per UL94	V0
Contact material	Electrolytic copper (E_{Cu})
Contact plating	tin-plated
Weight	0.2 g

Environmental requirements

Limit temperature range	-60 … +100 °C

Commercial data

PU (SPU)	500 Stück
Packaging type	bag
Country of origin	CN
GTIN	4055143934541

Subject to changes. Please also observe the further product documentation!

WAGO Corporation
Germantown, WI 53022
Phone: 1-800-DIN-RAIL (346-7245) | Fax: (262) 255-6222
Email: info.us@wago.com | Web: www.wago.us

Do you have any questions about our products?
We are always happy to take your call at +49 (571) 887-44222.

Customs tariff number	8536904000

Approvals / Certificates

Country specific Approvals

Logo	Approval	Additional Approval Text	Certificate name
	CB DEKRA Certification B.V.	IEC 61984	NL-49736 /A1
	CSA DEKRA Certification B.V.	C22.2	2362521
	KEMA/KEUR DEKRA Certification B.V.	EN 61984	71-102260 REV.1

UL-Approvals

Logo	Approval	Additional Approval Text	Certificate name
	UL Underwriters Laboratories Inc.	UL 1059	E45172
	UL Underwriters Laboratories Inc.	UL 1977	E45171

Counterpart

Item no.2091-1122
1-conductor female connector; push-button; Push-in CAGE CLAMP®; 1.5 mm²; Pin spacing 3.5 mm; 2-pole; 1,50 mm²; light gray

www.wago.com/2091-1122

Downloads

Documentation

Additional Information

Technical explanations	2019 Apr 3	pdf 2.0 MB	Download

Subject to changes. Please also observe the further product documentation!

WAGO Corporation
Germantown, WI 53022
Phone: 1-800-DIN-RAIL (346-7245) | Fax: (262) 255-6222
Email: info.us@wago.com | Web: www.wago.us

Do you have any questions about our products?
We are always happy to take your call at +49 (571) 887-44222.

CAD files

CAD data

2D/3D Models 2091-1702	URL	Download

CAE data

ZUKEN Portal 2091-1702	URL	Download

Environmental Product Compliance

Compliance Search

Environmental Product Compliance 2091-1702 THT male header; 1.0 mm Ø solder pin; straight; Pin spacing 3.5 mm; 2-pole; black	URL	Download

Installation Notes

Product family

picoMAX® 3.5
Show all products from the family

WAGO Corporation
Germantown, WI 53022
Phone: 1-800-DIN-RAIL (346-7245) | Fax: (262) 255-6222
Email: info.us@wago.com | Web: www.wago.us

Do you have any questions about our products?
We are always happy to take your call at +49 (571) 887-44222.