Data sheet | Item number: 2606-3110/020-000

PCB terminal block; lever; 6 mm²; Pin spacing 7.5 mm; 10-pole; Push-in CAGE CLAMP®; 6,00 mm²; gray

www.wago.com/2606-3110_020-000

RoHS ✓ Compliant

BOMcheck.net

Color:

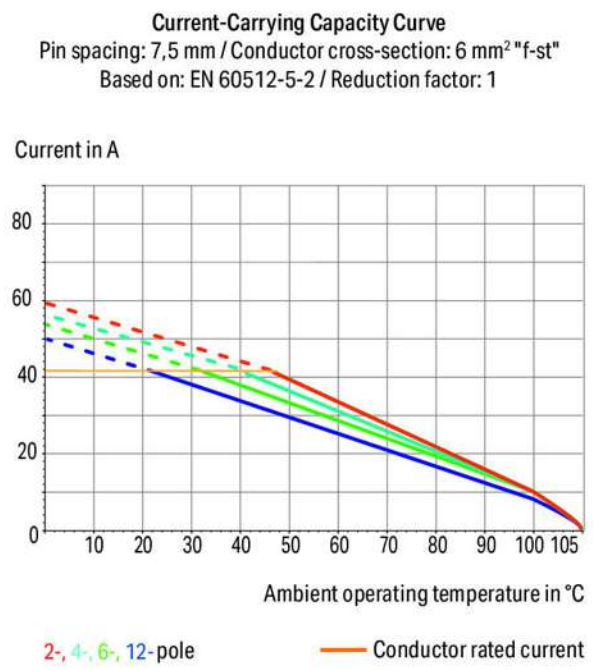

Subject to changes. Please also observe the further product documentation!

WAGO Kontakttechnik GmbH & Co. KG
Hansastr. 27
32423 Minden
Phone: +49571 887-0 | Fax: +49571 887-169
Email: info.de@wago.com | Web: www.wago.com

Do you have any questions about our products?
We are always happy to take your call at +49 (571) 887-44222.

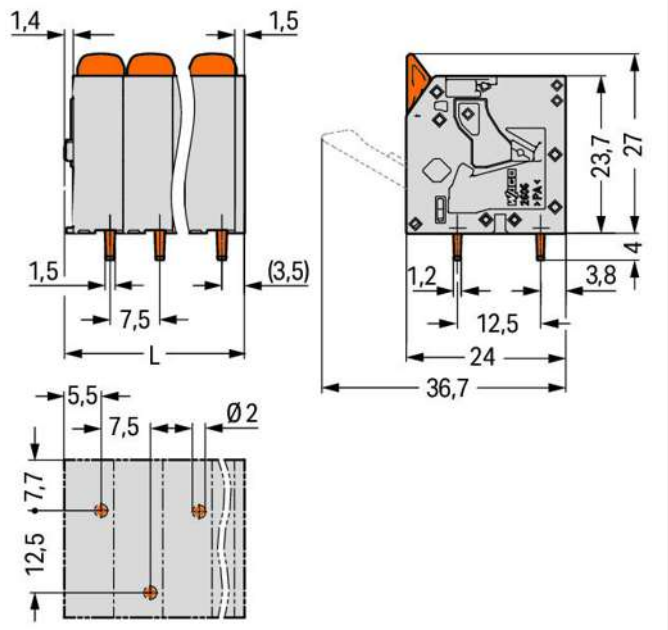

L = (pole no. - 1) x pin spacing + 10.35 mm

Item description

- PCB terminal blocks with levers and Push-in CAGE CLAMP® connection
- Push-in termination of solid and ferruled conductors
- Intuitive and tool-free operation
- Several clamping units can be held open simultaneously – convenient for terminating multi-core cables
- Testing can be performed both parallel and perpendicular to conductor entry

Data

Electrical data

Ratings per IEC/EN 60664-1

Ratings per	IEC/EN 60664-1
Rated voltage (III / 3)	800 V
Rated impulse voltage (III / 3)	8 kV
Rated voltage (III / 2)	1000 V
Rated impulse voltage (III / 2)	8 kV
Rated voltage (II / 2)	1000 V
Rated impulse voltage (II / 2)	8 kV

Subject to changes. Please also observe the further product documentation!

WAGO Kontakttechnik GmbH & Co. KG
Hansastr. 27
32423 Minden
Phone: +49571 887-0 | Fax: +49571 887-169
Email: info.de@wago.com | Web: www.wago.com

Do you have any questions about our products?
We are always happy to take your call at +49 (571) 887-44222.

Rated current	41 A
Legend (ratings)	(III / 2) ≙ Overvoltage category III / Pollution degree 2

Approvals per UL 1059

Rated voltage UL (Use Group B)	600 V
Rated current UL (Use Group B)	31 A
Rated voltage UL (Use Group C)	600 V
Rated current UL (Use Group C)	31 A
Approvals per	UL 1059

Connection data

Connection technology	Push-in CAGE CLAMP®
Actuation type	Lever
Solid conductor	0,2 … 10 mm² / 24 … 8 AWG
Fine-stranded conductor	0,2 … 10 mm² / 24 … 8 AWG
Fine-stranded conductor with ferrule with plastic collar	0,25 … 6 mm²
Fine-stranded conductor with ferrule without plastic collar	0,25 … 6 mm²
Fine-stranded conductor, with twin ferrule	0,25 … 2,5 mm²
Strip length	11 … 13 mm / 0.43 … 0.51 inch
Conductor entry angle to the PCB	90 °
No. of poles	10
Total number of connection points	10
Total number of potentials	10
Number of connection types	1
Number of levels	1

Geometrical Data

Pin spacing	7,5 mm / 0.295 inch
Width	77,85 mm / 3.065 inch
Height	31 mm / 1.22 inch
Height from the surface	27 mm / 1.063 inch
Depth	24 mm / 0.945 inch
Solder pin length	4 mm
Solder pin dimensions	1,5 x 1,2 mm
Drilled hole diameter (tolerance)	$2^{(+0,1)}$ mm

Subject to changes. Please also observe the further product documentation!

WAGO Kontakttechnik GmbH & Co. KG
Hansastr. 27
32423 Minden
Phone: +49571 887-0 | Fax: +49571 887-169
Email: info.de@wago.com | Web: www.wago.com

Do you have any questions about our products?
We are always happy to take your call at +49 (571) 887-44222.

PCB contact

PCB contact	THT
Solder pin arrangement	over the entire terminal strip (staggered)
Number of solder pins per potential	1

Material Data

Color	gray
Material group	I
Insulating material	Polyamide 66 (PA 66)
Flammability class per UL94	V0
Clamping spring material	Chrome nickel spring steel (CrNi)
Contact material	Electrolytic copper (E_{Cu})
Contact plating	tin-plated
Actuating element color	orange
Weight	42.1 g

Environmental Requirements

Limit temperature range	-60 … +105 °C

Commercial data

Packaging type	BOX
Country of origin	DE
GTIN	4055143586702
Customs Tariff No.	85369010000

Approvals / Certificates

Country specific Approvals

Logo	Approval	Additional Approval Text	Certificate name
	CB DEKRA Certification B.V.	IEC 60947-7-4	NL-58082
	CSA DEKRA Certification B.V.	C22.2	70146882
	KEMA/KEUR DEKRA Certification B.V.	EN 60947-7-4	71-107864

Subject to changes. Please also observe the further product documentation!

WAGO Kontakttechnik GmbH & Co. KG
Hansastr. 27
32423 Minden
Phone: +49571 887-0 | Fax: +49571 887-169
Email: info.de@wago.com | Web: www.wago.com

Do you have any questions about our products?
We are always happy to take your call at +49 (571) 887-44222.

UL-Approvals

Logo	Approval	Additional Approval Text	Certificate name
	cURus Underwriters Laboratories Inc.	UL 1059	20190731-E45172

Counterpart

Compatible products

ferrule

	Item no.: 216-108 Ferrule; Sleeve for 6 mm² / AWG 10; uninsulated; electro-tin plated	www.wago.com/216-108
	Item no.: 216-208 Ferrule; Sleeve for 6 mm² / AWG 10; insulated; electro-tin plated; electrolytic copper; gastight crimped; acc. to DIN 46228, Part 4/09.90; yellow	www.wago.com/216-208
	Item no.: 216-263 Ferrule; Sleeve for 1 mm² / AWG 18; insulated; electro-tin plated; electrolytic copper; gastight crimped; acc. to DIN 46228, Part 4/09.90; red	www.wago.com/216-263
	Item no.: 216-264 Ferrule; Sleeve for 1.5 mm² / AWG 16; insulated; electro-tin plated; electrolytic copper; gastight crimped; acc. to DIN 46228, Part 4/09.90; black	www.wago.com/216-264
	Item no.: 216-266 Ferrule; Sleeve for 2.5 mm² / AWG 14; insulated; electro-tin plated; electrolytic copper; gastight crimped; acc. to DIN 46228, Part 4/09.90; blue	www.wago.com/216-266
	Item no.: 216-267 Ferrule; Sleeve for 4 mm² / AWG 12; insulated; electro-tin plated; electrolytic copper; gastight crimped; acc. to DIN 46228, Part 4/09.90; gray	www.wago.com/216-267

Downloads

Documentation

Additional Information

Technical explanations	Apr 3, 2019	pdf 3.6 MB	Download

Subject to changes. Please also observe the further product documentation!

WAGO Kontakttechnik GmbH & Co. KG
Hansastr. 27
32423 Minden
Phone: +49571 887-0 | Fax: +49571 887-169
Email: info.de@wago.com | Web: www.wago.com

Do you have any questions about our products?
We are always happy to take your call at +49 (571) 887-44222.

CAD/CAE-Data

CAD data

2D/3D Models 2606-3110/020-000	URL	Download

PCB Design

Symbol and Footprint 2606-3110/020-000	URL	Download

CAx data for your PCB design, consisting of "schematic symbols and PCB footprints", allow easy integration of the WAGO component into your development environment.

Supported formats:

- Accel EDA 14 & 15
- Altium 6 to current version
- Cadence Allegro
- DesignSpark
- Eagle Libraries
- KiCad
- Mentor Graphics BoardStation
- Mentor Graphics Design Architect
- Mentor Graphics Design Expedition 99 and 2000
- OrCAD 9.X PCB and Capture
- PADS PowerPCB 3, 3.5, 4.X, and 5.X
- PADS PowerPCB and PowerLogic 3.0
- PCAD 2000, 2001, 2002, 2004, and 2006
- Pulsonix 8.5 or newer
- STL
- 3D STEP
- TARGET 3001!
- View Logic ViewDraw
- Quadcept
- Zuken CadStar 3 and 4
- Zuken CR-5000 and CR-8000

PCB Component Libraries (EDA), PCB CAD Library Ultra Librarian

Installation Notes

Subject to changes. Please also observe the further product documentation!

WAGO Kontakttechnik GmbH & Co. KG
Hansastr. 27
32423 Minden
Phone: +49571 887-0 | Fax: +49571 887-169
Email: info.de@wago.com | Web: www.wago.com

Do you have any questions about our products?
We are always happy to take your call at +49 (571) 887-44222.