Data sheet | Item number: 262-281

Space-saving, 4-conductor end terminal block; suitable for Ex e II applications; without push-buttons; without protruding snap-in mounting foot; for terminal strips with snap-in mounting feet; 4 mm²; CAGE CLAMP®; 4,00 mm²; light gray

www.wago.com/262-281

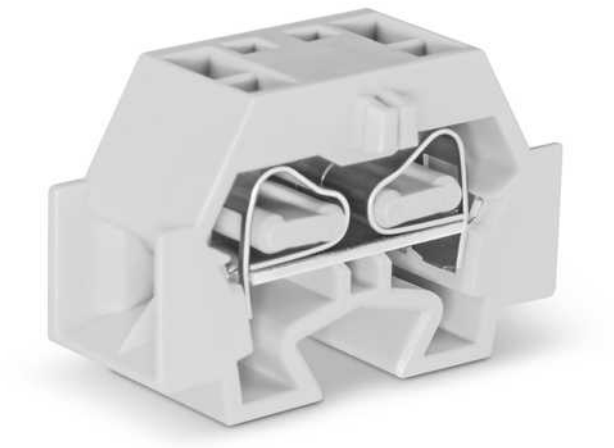

RoHS ✓ Compliant

BOMcheck.net

Color:

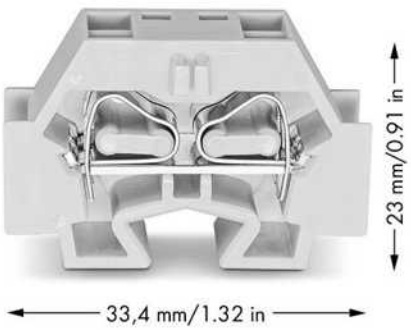

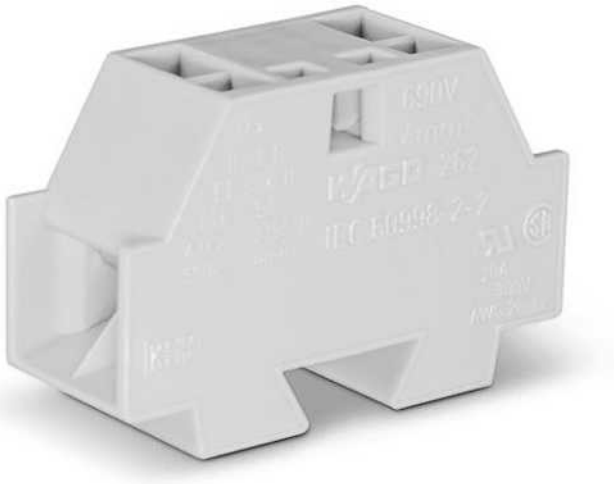

Data

Subject to changes. Please also observe the further product documentation!

WAGO Kontakttechnik GmbH & Co. KG
Hansastr. 27
32423 Minden
Phone: +49571 887-0 | Fax: +49571 887-169
Email: info.de@wago.com | Web: www.wago.com

Do you have any questions about our products?
We are always happy to take your call at +49 (571) 887-44222.

Electrical data

Approvals Ex

Rated voltage EN (Ex e II)	550 V
Rated current (Ex e II)	30 A

Connection data

Connection technology	CAGE CLAMP®
Actuation type	Operating tool
Connectable conductor materials	Copper
Solid conductor	0.5 … 4 mm² / 20 … 12 AWG
Fine-stranded conductor	0.5 … 4 mm² / 20 … 12 AWG
Strip length	9 … 10 mm / 0.35 … 0.39 inch
Total number of connection points	4
Total number of potentials	1
Number of levels	1
Type of wiring	Side-entry wiring

Geometrical Data

Width	12 mm / 0.472 inch
Height from the surface	23 mm / 0.906 inch
Depth	33.5 mm / 1.319 inch

Mechanical data

Design	horizontal
Mounting type	Snap-in mounting foot
Marking level	Side marking

Material Data

Color	light gray
Fire load	0.111 MJ
Weight	6.9 g

Commercial data

Product Group	9 (Std. Chassis Mt. Blocks)

Subject to changes. Please also observe the further product documentation!

WAGO Kontakttechnik GmbH & Co. KG
Hansastr. 27
32423 Minden
Phone: +49571 887-0 | Fax: +49571 887-169
Email: info.de@wago.com | Web: www.wago.com

Do you have any questions about our products?
We are always happy to take your call at +49 (571) 887-44222.

Packaging type	BOX
Country of origin	CH
GTIN	4044918639156
Customs Tariff No.	85369010000

Approvals / Certificates

Ex-Approvals

Logo	Approval	Additional Approval Text	Certificate name
	AEx UL International Germany GmbH c/o Physikalisch Technische Bundesanstalt	UL 60079	E185892 sec 6
	ATEx Physikalisch Technische Bundesanstalt (PTB)	EN 60079	PTB 98 ATEX 3125 U (II 2 G EEx e II)
	IECEx Physikalisch Technische Bundesanstalt (PTB)	IEC 60079	IECEx PTB 04.0004U (EX e IIC Gb)

Country specific Approvals

Logo	Approval	Additional Approval Text	Certificate name
	CSA DEKRA Certification B.V.	C22.2	70010891

UL-Approvals

Logo	Approval	Additional Approval Text	Certificate name
	UR Underwriters Laboratories Inc.	UL 1059	20190731-E45172

Counterpart

Subject to changes. Please also observe the further product documentation!

WAGO Kontakttechnik GmbH & Co. KG
Hansastr. 27
32423 Minden
Phone: +49571 887-0 | Fax: +49571 887-169
Email: info.de@wago.com | Web: www.wago.com

Do you have any questions about our products?
We are always happy to take your call at +49 (571) 887-44222.

Compatible products

ferrule

	Item no.: 216-101 Ferrule; Sleeve for 0.5 mm² / AWG 22; uninsulated; electro-tin plated	www.wago.com/216-101
	Item no.: 216-102 Ferrule; Sleeve for 0.75 mm² / AWG 20; uninsulated; electro-tin plated	www.wago.com/216-102
	Item no.: 216-103 Ferrule; Sleeve for 1 mm² / AWG 18; uninsulated; electro-tin plated	www.wago.com/216-103
	Item no.: 216-104 Ferrule; Sleeve for 1.5 mm² / AWG 16; uninsulated; electro-tin plated	www.wago.com/216-104
	Item no.: 216-108 Ferrule; Sleeve for 6 mm² / AWG 10; uninsulated; electro-tin plated	www.wago.com/216-108
	Item no.: 216-109 Ferrule; Sleeve for 10 mm² / AWG 8; uninsulated; electro-tin plated	www.wago.com/216-109
	Item no.: 216-110 Ferrule; Sleeve for 16 mm² / AWG 6; uninsulated; electro-tin plated	www.wago.com/216-110
	Item no.: 216-121 Ferrule; Sleeve for 0.5 mm² / AWG 22; uninsulated; electro-tin plated	www.wago.com/216-121
	Item no.: 216-122 Ferrule; Sleeve for 0.75 mm² / AWG 20; uninsulated; electro-tin plated	www.wago.com/216-122
	Item no.: 216-123 Ferrule; Sleeve for 1 mm² / AWG 18; uninsulated; electro-tin plated	www.wago.com/216-123
	Item no.: 216-124 Ferrule; Sleeve for 1.5 mm² / AWG 16; uninsulated; electro-tin plated	www.wago.com/216-124
	Item no.: 216-131 Ferrule; Sleeve for 0.25 mm² / AWG 24; uninsulated; electro-tin plated	www.wago.com/216-131
	Item no.: 216-132 Ferrule; Sleeve for 0.34 mm² / AWG 24; uninsulated; electro-tin plated	www.wago.com/216-132
	Item no.: 216-141 Ferrule; Sleeve for 0.5 mm² / 20 AWG; uninsulated; electro-tin plated; electrolytic copper; gastight crimped; acc. to DIN 46228, Part 1/08.92	www.wago.com/216-141
	Item no.: 216-142	

Subject to changes. Please also observe the further product documentation!

WAGO Kontakttechnik GmbH & Co. KG
Hansastr. 27
32423 Minden
Phone: +49571 887-0 | Fax: +49571 887-169
Email: info.de@wago.com | Web: www.wago.com

Do you have any questions about our products?
We are always happy to take your call at +49 (571) 887-44222.

	Ferrule; Sleeve for 0.75 mm² / 18 AWG; uninsulated; electro-tin plated; electrolytic copper; gastight crimped; acc. to DIN 46228, Part 1/08.92	www.wago.com/216-142
	Item no.: 216-143 Ferrule; Sleeve for 1 mm² / AWG 18; uninsulated; electro-tin plated; electrolytic copper; gastight crimped; acc. to DIN 46228, Part 1/08.92	www.wago.com/216-143
	Item no.: 216-144 Ferrule; Sleeve for 1.5 mm² / AWG 16; uninsulated; electro-tin plated; electrolytic copper; gastight crimped; acc. to DIN 46228, Part 1/08.92	www.wago.com/216-144
	Item no.: 216-151 Ferrule; Sleeve for 0.25 mm² / AWG 24; uninsulated; electro-tin plated	www.wago.com/216-151
	Item no.: 216-152 Ferrule; Sleeve for 0.34 mm² / AWG 24; uninsulated; electro-tin plated	www.wago.com/216-152
	Item no.: 216-201 Ferrule; Sleeve for 0.5 mm² / 20 AWG; insulated; electro-tin plated; white	www.wago.com/216-201
	Item no.: 216-202 Ferrule; Sleeve for 0.75 mm² / 18 AWG; insulated; electro-tin plated; gray	www.wago.com/216-202
	Item no.: 216-203 Ferrule; Sleeve for 1 mm² / AWG 18; insulated; electro-tin plated; red	www.wago.com/216-203
	Item no.: 216-204 Ferrule; Sleeve for 1.5 mm² / AWG 16; insulated; electro-tin plated; black	www.wago.com/216-204
	Item no.: 216-205 Ferrule; Sleeve for 2.08 mm² / AWG 14; insulated; electro-tin plated; yellow	www.wago.com/216-205
	Item no.: 216-206 Ferrule; Sleeve for 2.5 mm² / AWG 14; insulated; electro-tin plated; blue	www.wago.com/216-206
	Item no.: 216-208 Ferrule; Sleeve for 6 mm² / AWG 10; insulated; electro-tin plated; electrolytic copper; gastight crimped; acc. to DIN 46228, Part 4/09.90; yellow	www.wago.com/216-208
	Item no.: 216-209 Ferrule; Sleeve for 10 mm² / AWG 8; insulated; electro-tin plated; red	www.wago.com/216-209
	Item no.: 216-210 Ferrule; Sleeve for 16 mm² / AWG 6; insulated; electro-tin plated; electrolytic copper; gastight crimped; acc. to DIN 46228, Part 4/09.90; blue	www.wago.com/216-210
	Item no.: 216-221 Ferrule; Sleeve for 0.5 mm² / 20 AWG; insulated; electro-tin plated; white	www.wago.com/216-221
	Item no.: 216-222 Ferrule; Sleeve for 0.75 mm² / 18 AWG; insulated; electro-tin plated; gray	www.wago.com/216-222
	Item no.: 216-223 Ferrule; Sleeve for 1 mm² / AWG 18; insulated; electro-tin plated; red	www.wago.com/216-223
	Item no.: 216-224 Ferrule; Sleeve for 1.5 mm² / AWG 16; insulated; electro-tin plated; black	www.wago.com/216-224

Subject to changes. Please also observe the further product documentation!

WAGO Kontakttechnik GmbH & Co. KG
Hansastr. 27
32423 Minden
Phone: +49571 887-0 | Fax: +49571 887-169
Email: info.de@wago.com | Web: www.wago.com

Do you have any questions about our products?
We are always happy to take your call at +49 (571) 887-44222.

	Item no.: 216-241 Ferrule; Sleeve for 0.5 mm² / 20 AWG; insulated; electro-tin plated; electrolytic copper; gastight crimped; acc. to DIN 46228, Part 4/09.90; white	www.wago.com/216-241
	Item no.: 216-242 Ferrule; Sleeve for 0.75 mm² / 18 AWG; insulated; electro-tin plated; electrolytic copper; gastight crimped; acc. to DIN 46228, Part 4/09.90; gray	www.wago.com/216-242
	Item no.: 216-243 Ferrule; Sleeve for 1 mm² / AWG 18; insulated; electro-tin plated; electrolytic copper; gastight crimped; acc. to DIN 46228, Part 4/09.90; red	www.wago.com/216-243
	Item no.: 216-244 Ferrule; Sleeve for 1.5 mm² / AWG 16; insulated; electro-tin plated; electrolytic copper; gastight crimped; acc. to DIN 46228, Part 4/09.90; black	www.wago.com/216-244
	Item no.: 216-246 Ferrule; Sleeve for 2.5 mm² / AWG 14; insulated; electro-tin plated; electrolytic copper; gastight crimped; acc. to DIN 46228, Part 4/09.90; blue	www.wago.com/216-246
	Item no.: 216-262 Ferrule; Sleeve for 0.75 mm² / 18 AWG; insulated; electro-tin plated; electrolytic copper; gastight crimped; acc. to DIN 46228, Part 4/09.90; gray	www.wago.com/216-262
	Item no.: 216-263 Ferrule; Sleeve for 1 mm² / AWG 18; insulated; electro-tin plated; electrolytic copper; gastight crimped; acc. to DIN 46228, Part 4/09.90; red	www.wago.com/216-263
	Item no.: 216-264 Ferrule; Sleeve for 1.5 mm² / AWG 16; insulated; electro-tin plated; electrolytic copper; gastight crimped; acc. to DIN 46228, Part 4/09.90; black	www.wago.com/216-264
	Item no.: 216-266 Ferrule; Sleeve for 2.5 mm² / AWG 14; insulated; electro-tin plated; electrolytic copper; gastight crimped; acc. to DIN 46228, Part 4/09.90; blue	www.wago.com/216-266
	Item no.: 216-267 Ferrule; Sleeve for 4 mm² / AWG 12; insulated; electro-tin plated; electrolytic copper; gastight crimped; acc. to DIN 46228, Part 4/09.90; gray	www.wago.com/216-267
	Item no.: 216-284 Ferrule; Sleeve for 1.5 mm² / AWG 16; insulated; electro-tin plated; electrolytic copper; gastight crimped; acc. to DIN 46228, Part 4/09.90; black	www.wago.com/216-284
	Item no.: 216-286 Ferrule; Sleeve for 2.5 mm² / AWG 14; insulated; electro-tin plated; electrolytic copper; gastight crimped; acc. to DIN 46228, Part 4/09.90; blue	www.wago.com/216-286
	Item no.: 216-287 Ferrule; Sleeve for 4 mm² / AWG 12; insulated; electro-tin plated; electrolytic copper; gastight crimped; acc. to DIN 46228, Part 4/09.90; gray	www.wago.com/216-287
	Item no.: 216-288 Ferrule; Sleeve for 6 mm² / AWG 10; insulated; electro-tin plated; electrolytic copper; gastight crimped; acc. to DIN 46228, Part 4/09.90; yellow	www.wago.com/216-288
	Item no.: 216-289 Ferrule; Sleeve for 10 mm² / AWG 8; insulated; electro-tin plated; electrolytic copper; gastight crimped; acc. to DIN 46228, Part 4/09.90; red	www.wago.com/216-289

Subject to changes. Please also observe the further product documentation!

WAGO Kontakttechnik GmbH & Co. KG
Hansastr. 27
32423 Minden
Phone: +49571 887-0 | Fax: +49571 887-169
Email: info.de@wago.com | Web: www.wago.com

Do you have any questions about our products?
We are always happy to take your call at +49 (571) 887-44222.

	Item no.: 216-301 Ferrule; Sleeve for 0.25 mm² / AWG 24; insulated; electro-tin plated; yellow	www.wago.com/216-301
	Item no.: 216-302 Ferrule; Sleeve for 0.34 mm² / 22 AWG; insulated; electro-tin plated; green	www.wago.com/216-302
	Item no.: 216-321 Ferrule; Sleeve for 0.25 mm² / AWG 24; insulated; electro-tin plated; yellow	www.wago.com/216-321
	Item no.: 216-322 Ferrule; Sleeve for 0.34 mm² / 22 AWG; insulated; electro-tin plated; green	www.wago.com/216-322
Carrier rail		
	Item no.: 210-154 Aluminum carrier rail; 1000 mm long; 18 mm wide; 7 mm high; silver-colored	www.wago.com/210-154
General accessories		
	Item no.: 209-123 Mounting foot with screw; can be screwed on terminal blocks with fixing flange; 6.4 mm wide; gray	www.wago.com/209-123
assembling		
	Item no.: 209-137 Mounting adapter; can be used as end plate; 6.5 mm wide; gray	www.wago.com/209-137
End plate		
	Item no.: 262-363 End plate; with fixing flange; light gray	www.wago.com/262-363
	Item no.: 262-371 End plate; with snap-in mounting foot; gray	www.wago.com/262-371
	Item no.: 262-373 End plate; with snap-in mounting foot; light gray	www.wago.com/262-373
Jumper		
	Item no.: 262-402 Comb-style jumper bar; insulated; 2-way; reduces conductor size to 2.5 mm; gray	www.wago.com/262-402
tools		
	Item no.: 209-132 Operating tool; for connecting comb-style jumper bar; 2-way; of insulating material	www.wago.com/209-132
	Item no.: 210-657 Operating tool; Blade: 3.5 x 0.5 mm; with a partially insulated shaft; short	www.wago.com/210-657
	Item no.: 210-658 Operating tool; Blade: 3.5 x 0.5 mm; with a partially insulated shaft; angled; short	www.wago.com/210-658
	Item no.: 210-720 Operating tool; Blade: 3.5 x 0.5 mm; with a partially insulated shaft	www.wago.com/210-720

Subject to changes. Please also observe the further product documentation!

WAGO Kontakttechnik GmbH & Co. KG
Hansastr. 27
32423 Minden
Phone: +49571 887-0 | Fax: +49571 887-169
Email: info.de@wago.com | Web: www.wago.com

Do you have any questions about our products?
We are always happy to take your call at +49 (571) 887-44222.

Downloads

Documentation

Bid Text

262-281 doc - Datei	Aug 17, 2017	doc 25.6 kB	Download
262-281 GAEB X81 - Datei	Feb 19, 2019	xml 3.2 kB	Download

Additional Information

Technical explanations	Apr 3, 2019	pdf 2.1 MB	Download

CAD/CAE-Data

CAD data

2D/3D Models 262-281	URL	Download

CAE data

EPLAN Data Portal 262-281	URL	Download
WSCAD Universe 262-281	URL	Download

Installation Notes

Assembly

Assembling modular terminal blocks into terminal strips.

Mounting an end plate.

Subject to changes. Please also observe the further product documentation!

WAGO Kontakttechnik GmbH & Co. KG
Hansastr. 27
32423 Minden
Phone: +49571 887-0 | Fax: +49571 887-169
Email: info.de@wago.com | Web: www.wago.com

Do you have any questions about our products?
We are always happy to take your call at +49 (571) 887-44222.

Inserting a conductor

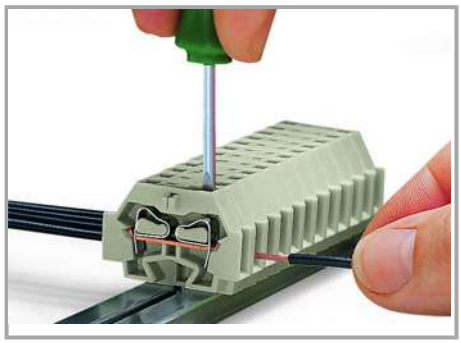

CAGE CLAMP® connection

Inserting a conductor.

Jumpered

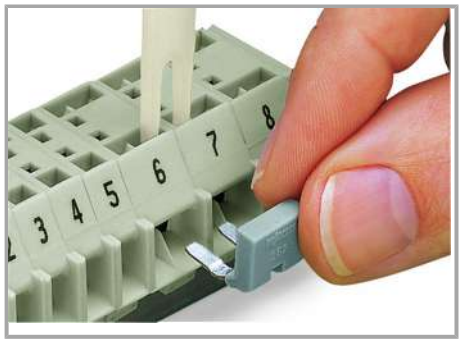

Commoning with comb-style jumper bar.

Marking

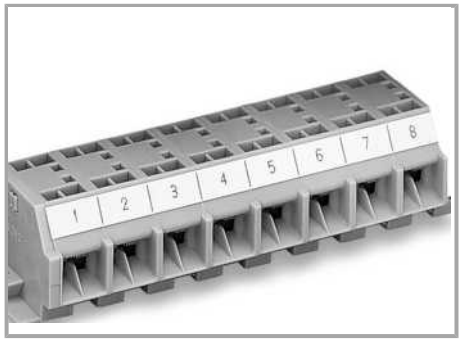

Marking with self-adhesive marking strips.

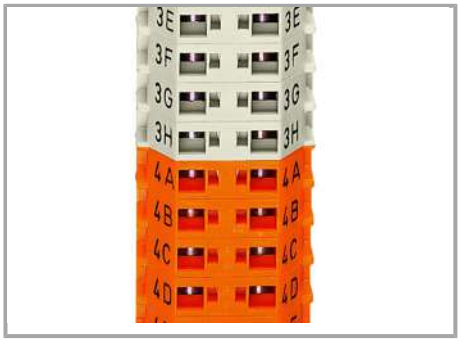

Marking by direct printing (upon request).

Subject to changes. Please also observe the further product documentation!

WAGO Kontakttechnik GmbH & Co. KG
Hansastr. 27
32423 Minden
Phone: +49571 887-0 | Fax: +49571 887-169
Email: info.de@wago.com | Web: www.wago.com

Do you have any questions about our products?
We are always happy to take your call at +49 (571) 887-44222.