Data sheet | Item number: 2636-1112/020-000

PCB terminal block; 16 mm²; Pin spacing 10 mm; 12-pole; Push-in CAGE CLAMP®; 16,00 mm²; gray

www.wago.com/2636-1112_020-000

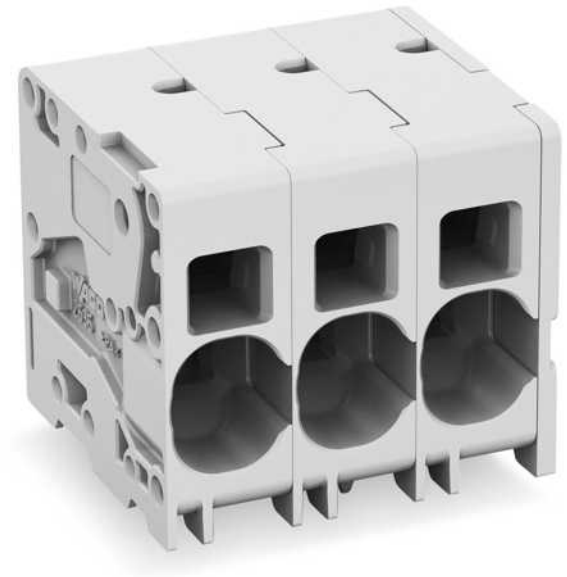

RoHS ✓ Compliant

BOMcheck.net

Color:

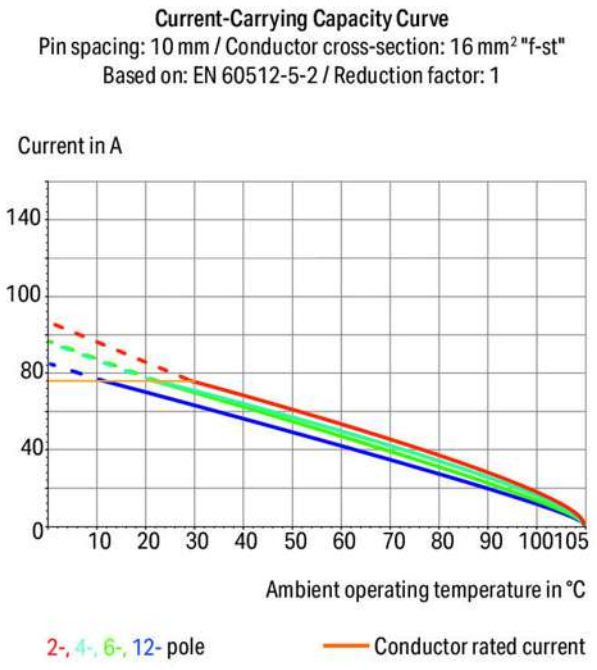

Subject to changes. Please also observe the further product documentation!

WAGO Kontakttechnik GmbH & Co. KG
Hansastr. 27
32423 Minden
Phone: +49571 887-0 | Fax: +49571 887-169
Email: info.de@wago.com | Web: www.wago.com

Do you have any questions about our products?
We are always happy to take your call at +49 (571) 887-44222.

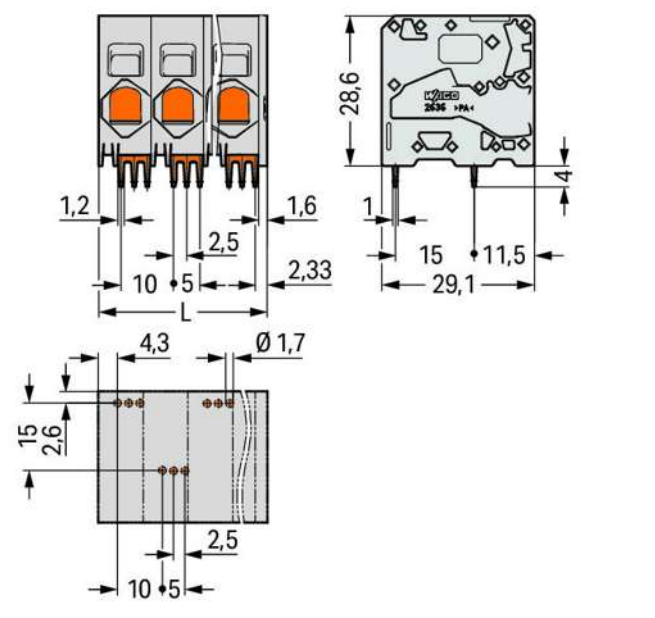

L = (pole no. - 1) x pin spacing + 11.6 mm

Item description

- PCB terminal strips with Push-in CAGE CLAMP® connection
- Push-in termination of solid and ferruled conductors
- Ideal for panel feedthrough applications via operation parallel to conductor entry
- Testing can be performed both parallel and perpendicular to conductor entry

Data

Electrical data

Ratings per IEC/EN 60664-1

Ratings per	IEC/EN 60664-1
Rated voltage (III / 3)	1000 V
Rated impulse voltage (III / 3)	8 kV
Rated voltage (III / 2)	1000 V
Rated impulse voltage (III / 2)	8 kV
Rated voltage (II / 2)	1000 V
Rated impulse voltage (II / 2)	8 kV
Rated current	76 A
Legend (ratings)	(III / 2) ≙ Overvoltage category III / Pollution degree 2

Subject to changes. Please also observe the further product documentation!

WAGO Kontakttechnik GmbH & Co. KG
Hansastr. 27
32423 Minden
Phone: +49571 887-0 | Fax: +49571 887-169
Email: info.de@wago.com | Web: www.wago.com

Do you have any questions about our products?
We are always happy to take your call at +49 (571) 887-44222.

Approvals per UL 1059

Rated voltage UL (Use Group B)	600 V
Rated current UL (Use Group B)	66 A
Rated voltage UL (Use Group C)	600 V
Rated current UL (Use Group C)	66 A
Approvals per	UL 1059

Connection data

Connection technology	Push-in CAGE CLAMP®
Actuation type	Operating tool
Solid conductor	0.75 … 16 mm² / 18 … 4 AWG
Fine-stranded conductor	0.75 … 25 mm² / 18 … 4 AWG
Fine-stranded conductor with ferrule with plastic collar	0.75 … 16 mm²
Fine-stranded conductor with ferrule without plastic collar	0.75 … 16 mm²
Fine-stranded conductor, with twin ferrule	0.75 … 6 mm²
Strip length	18 … 20 mm / 0.71 … 0.79 inch
Conductor entry angle to the PCB	0 °
No. of poles	12
Total number of connection points	12
Total number of potentials	12
Number of connection types	1
Number of levels	1

Geometrical Data

Pin spacing	10 mm / 0.394 inch
Width	121.6 mm / 4.787 inch
Height	32.6 mm / 1.283 inch
Height from the surface	28.6 mm / 1.126 inch
Depth	29.1 mm / 1.146 inch
Solder pin length	4 mm
Solder pin dimensions	1.2 x 1 mm
Drilled hole diameter (tolerance)	$1.7^{(+0.1)}$ mm

Mechanical data

Type of mounting	Feed-through mounting

Subject to changes. Please also observe the further product documentation!

WAGO Kontakttechnik GmbH & Co. KG
Hansastr. 27
32423 Minden
Phone: +49571 887-0 | Fax: +49571 887-169
Email: info.de@wago.com | Web: www.wago.com

Do you have any questions about our products?
We are always happy to take your call at +49 (571) 887-44222.

PCB contact

PCB contact	THT
Solder pin arrangement	over the entire terminal strip, staggered
Number of solder pins per potential	3

Material Data

Color	gray
Material group	I
Insulating material	Polyamide 66 (PA 66)
Flammability class per UL94	V0
Clamping spring material	Chrome nickel spring steel (CrNi)
Contact material	Electrolytic copper (E_{Cu})
Contact plating	tin-plated
Weight	99.1 g

Environmental Requirements

Limit temperature range	-60 … +105 °C

Commercial data

Packaging type	BOX
Country of origin	DE
GTIN	4055143625432
Customs Tariff No.	85369010000

Approvals / Certificates

Country specific Approvals

Logo	Approval	Additional Approval Text	Certificate name
	CB DEKRA Certification B.V.	EN 60947-7-4	NL-58171
	CSA DEKRA Certification B.V.	C22.2	70154737
	KEMA/KEUR DEKRA Certification B.V.	EN 60947-7-4	71-108233

Subject to changes. Please also observe the further product documentation!

WAGO Kontakttechnik GmbH & Co. KG
Hansastr. 27
32423 Minden
Phone: +49571 887-0 | Fax: +49571 887-169
Email: info.de@wago.com | Web: www.wago.com

Do you have any questions about our products?
We are always happy to take your call at +49 (571) 887-44222.

UL-Approvals

Logo	Approval	Additional Approval Text	Certificate name
	cURus Underwriters Laboratories Inc.	C22.2 No. 158	E45172-20171206

Counterpart

Compatible products

tools		
	Item no.: 210-721 Operating tool; Blade: 5.5 x 0.8 mm; with a partially insulated shaft	www.wago.com/210-721
ferrule		
	Item no.: 216-210 Ferrule; Sleeve for 16 mm² / AWG 6; insulated; electro-tin plated; electrolytic copper; gastight crimped; acc. to DIN 46228, Part 4/09.90; blue	www.wago.com/216-210
	Item no.: 216-284 Ferrule; Sleeve for 1.5 mm² / AWG 16; insulated; electro-tin plated; electrolytic copper; gastight crimped; acc. to DIN 46228, Part 4/09.90; black	www.wago.com/216-284
	Item no.: 216-286 Ferrule; Sleeve for 2.5 mm² / AWG 14; insulated; electro-tin plated; electrolytic copper; gastight crimped; acc. to DIN 46228, Part 4/09.90; blue	www.wago.com/216-286
	Item no.: 216-287 Ferrule; Sleeve for 4 mm² / AWG 12; insulated; electro-tin plated; electrolytic copper; gastight crimped; acc. to DIN 46228, Part 4/09.90; gray	www.wago.com/216-287
	Item no.: 216-288 Ferrule; Sleeve for 6 mm² / AWG 10; insulated; electro-tin plated; electrolytic copper; gastight crimped; acc. to DIN 46228, Part 4/09.90; yellow	www.wago.com/216-288
	Item no.: 216-289 Ferrule; Sleeve for 10 mm² / AWG 8; insulated; electro-tin plated; electrolytic copper; gastight crimped; acc. to DIN 46228, Part 4/09.90; red	www.wago.com/216-289

Subject to changes. Please also observe the further product documentation!

WAGO Kontakttechnik GmbH & Co. KG
Hansastr. 27
32423 Minden
Phone: +49571 887-0 | Fax: +49571 887-169
Email: info.de@wago.com | Web: www.wago.com

Do you have any questions about our products?
We are always happy to take your call at +49 (571) 887-44222.

Downloads

Documentation

Additional Information

Technical explanations	Apr 3, 2019	pdf 3.6 MB	Download

CAD/CAE-Data

CAD data

2D/3D Models 2636-1112/020-000	URL	Download

PCB Design

Symbol and Footprint 2636-1112/020-000	URL	Download

CAx data for your PCB design, consisting of "schematic symbols and PCB footprints", allow easy integration of the WAGO component into your development environment.

Supported formats:

- Accel EDA 14 & 15
- Altium 6 to current version
- Cadence Allegro
- DesignSpark
- Eagle Libraries
- KiCad
- Mentor Graphics BoardStation
- Mentor Graphics Design Architect
- Mentor Graphics Design Expedition 99 and 2000
- OrCAD 9.X PCB and Capture
- PADS PowerPCB 3, 3.5, 4.X, and 5.X
- PADS PowerPCB and PowerLogic 3.0
- PCAD 2000, 2001, 2002, 2004, and 2006
- Pulsonix 8.5 or newer
- STL
- 3D STEP
- TARGET 3001!
- View Logic ViewDraw
- Quadcept

Subject to changes. Please also observe the further product documentation!

WAGO Kontakttechnik GmbH & Co. KG
Hansastr. 27
32423 Minden
Phone: +49571 887-0 | Fax: +49571 887-169
Email: info.de@wago.com | Web: www.wago.com

Do you have any questions about our products?
We are always happy to take your call at +49 (571) 887-44222.

- Zuken CadStar 3 and 4
- Zuken CR-5000 and CR-8000

PCB Component Libraries (EDA), PCB CAD Library Ultra Librarian

Installation Notes

WAGO Kontakttechnik GmbH & Co. KG
Hansastr. 27
32423 Minden
Phone: +49571 887-0 | Fax: +49571 887-169
Email: info.de@wago.com | Web: www.wago.com

Do you have any questions about our products?
We are always happy to take your call at +49 (571) 887-44222.