Data sheet | Item number: 280-503/281-581

Component terminal block; double-deck; with end plate; with gas-filled surge arrester; for DIN-rail 35 x 15 and 35 x 7.5; 2.5 mm²; CAGE CLAMP®; 2,50 mm²; gray

www.wago.com/280-503_281-581

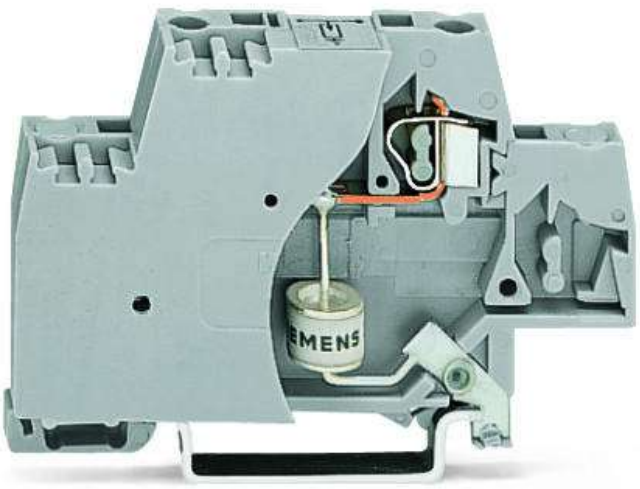

RoHS ✓ Compliant

BOMcheck.net

Color:

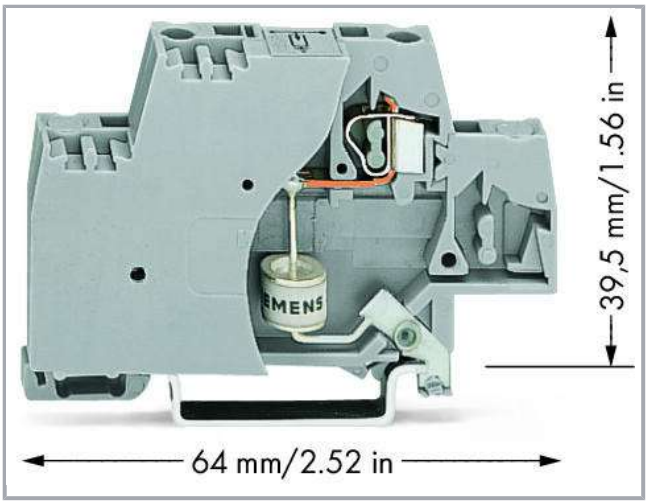

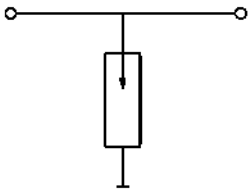

Item description

Short description:

Subject to changes. Please also observe the further product documentation!

WAGO Kontakttechnik GmbH & Co. KG
Hansastr. 27
32423 Minden
Phone: +49571 887-0 | Fax: +49571 887-169
Email: info.de@wago.com | Web: www.wago.com

Do you have any questions about our products?
We are always happy to take your call at +49 (571) 887-44222.

Terminal blocks with surge suppression device and direct connection to the DIN-35 rail; these single-stage surge suppression devices are equipped either with 280 Series gas-filled surge arrester (coarse), varistor (medium) or suppressor diode (fine).

Features:

- Protect your system against overvoltage
- Slim, space-saving design
- Control operational costs by preventing expensive, unplanned downtime
- High operational reliability and system uptime

Data

Electrical data

Nominal operating voltage	AC/DC 230 V
Maximum continuous operating voltage	AC 450 V / DC 600 V
Rated continuous current	20 A
Nominal discharge current (8/20 µs) per line	5 kA
Voltage protection level (8/20 µs)	≤ AC 1100 V
Response time line/line	≤
Capacitance	≤ 2 pF

Connection data

Connections (number)	2
Connection technology	CAGE CLAMP®
Solid conductor	0,08 … 2,5 mm² / 28 … 14 AWG
Fine-stranded conductor	0,08 … 2,5 mm² / 28 … 14 AWG
Strip length	8 … 9 mm / 0.31 … 0.35 inch

Geometrical Data

Width	10 mm / 0.394 inch
Height from upper-edge of DIN-35 rail	39,5 mm / 1.555 inch
Depth	64 mm / 2.52 inch

Mechanical data

Design	With end plate; with direct connection to DIN rail
Type of mounting	DIN-35 rail

Subject to changes. Please also observe the further product documentation!

WAGO Kontakttechnik GmbH & Co. KG
Hansastr. 27
32423 Minden
Phone: +49571 887-0 | Fax: +49571 887-169
Email: info.de@wago.com | Web: www.wago.com

Do you have any questions about our products?
We are always happy to take your call at +49 (571) 887-44222.

Material Data

Color	gray
Weight	12.7 g

Commercial data

Product Group	1 (Rail Mounted Terminal Blocks)
Packaging type	BOX
Country of origin	DE
GTIN	4045454194284
Customs Tariff No.	85369010000

Counterpart

Compatible products

Jumper		
	Item no.: 280-482 Comb-style jumper bar; insulated; 2-way; IN = IN terminal block; gray	www.wago.com/280-482
	Item no.: 280-483 Comb-style jumper bar; insulated; 3-way; IN = IN terminal block; gray	www.wago.com/280-483
	Item no.: 280-484 Comb-style jumper bar; insulated; 4-way; IN = IN terminal block; gray	www.wago.com/280-484
	Item no.: 280-485 Comb-style jumper bar; insulated; 5-way; IN = IN terminal block; gray	www.wago.com/280-485
	Item no.: 280-490 Comb-style jumper bar; insulated; 10-way; IN = IN terminal block; gray	www.wago.com/280-490
	Item no.: 280-492 Alternate comb-style jumper bar; insulated; 2-way; IN = IN terminal block; gray	www.wago.com/280-492
Marking accessories		
	Item no.: 2009-145 Mini-WSB Inline; for Smart Printer; 1700 pieces on roll; stretchable 5 - 5.2 mm; plain; snap-on type; white	www.wago.com/2009-145

Subject to changes. Please also observe the further product documentation!

WAGO Kontakttechnik GmbH & Co. KG
Hansastr. 27
32423 Minden
Phone: +49571 887-0 | Fax: +49571 887-169
Email: info.de@wago.com | Web: www.wago.com

Do you have any questions about our products?
We are always happy to take your call at +49 (571) 887-44222.

	Item no.: 2009-145/000-002 Mini-WSB Inline; for Smart Printer; 1700 pieces on roll; stretchable 5 - 5.2 mm; plain; snap-on type; white	www.wago.com/2009-145/000-002
	Item no.: 2009-145/000-005 Mini-WSB Inline; for Smart Printer; 1700 pieces on roll; stretchable 5 - 5.2 mm; plain; snap-on type; red	www.wago.com/2009-145/000-005
	Item no.: 2009-145/000-006 Mini-WSB Inline; for Smart Printer; 1700 pieces on roll; stretchable 5 - 5.2 mm; plain; snap-on type; blue	www.wago.com/2009-145/000-006
	Item no.: 2009-145/000-007 Mini-WSB Inline; for Smart Printer; 1700 pieces on roll; stretchable 5 - 5.2 mm; plain; snap-on type; white	www.wago.com/2009-145/000-007
	Item no.: 2009-145/000-012 Mini-WSB Inline; for Smart Printer; 1700 pieces on roll; stretchable 5 - 5.2 mm; plain; snap-on type; orange	www.wago.com/2009-145/000-012
	Item no.: 2009-145/000-023 Mini-WSB Inline; for Smart Printer; 1700 pieces on roll; stretchable 5 - 5.2 mm; plain; snap-on type; green	www.wago.com/2009-145/000-023
	Item no.: 2009-145/000-024 Mini-WSB Inline; for Smart Printer; 1700 pieces on roll; stretchable 5 - 5.2 mm; plain; snap-on type; violet	www.wago.com/2009-145/000-024
	Item no.: 248-501 Miniature WSB Quick marking system; plain; Marker width 5 mm; 10 strips with 10 markers per card	www.wago.com/248-501
	Item no.: 248-501/000-002 Mini-WSB marking card; as card; not stretchable; plain; snap-on type; yellow	www.wago.com/248-501/000-002
	Item no.: 248-501/000-005 Mini-WSB marking card; as card; not stretchable; plain; snap-on type; red	www.wago.com/248-501/000-005
	Item no.: 248-501/000-006 Mini-WSB marking card; as card; not stretchable; plain; snap-on type; blue	www.wago.com/248-501/000-006
	Item no.: 248-501/000-007 Mini-WSB marking card; as card; not stretchable; plain; snap-on type; gray	www.wago.com/248-501/000-007
	Item no.: 248-501/000-012 Mini-WSB marking card; as card; not stretchable; plain; snap-on type; orange	www.wago.com/248-501/000-012

Subject to changes. Please also observe the further product documentation!

WAGO Kontakttechnik GmbH & Co. KG
Hansastr. 27
32423 Minden
Phone: +49571 887-0 | Fax: +49571 887-169
Email: info.de@wago.com | Web: www.wago.com

Do you have any questions about our products?
We are always happy to take your call at +49 (571) 887-44222.

	Item no.: 248-501/000-017 Mini-WSB marking card; as card; not stretchable; plain; snap-on type; light green	www.wago.com/248-501/000-017
	Item no.: 248-501/000-023 Mini-WSB marking card; as card; not stretchable; plain; snap-on type; green	www.wago.com/248-501/000-023
	Item no.: 248-501/000-024 Mini-WSB marking card; as card; not stretchable; plain; snap-on type; violet	www.wago.com/248-501/000-024
Insulation stop		
	Item no.: 280-470 Insulation stop; 0.08 - 0.2 mm² "s" (0.14 mm² "f-st"); 5 pieces/strip; white	www.wago.com/280-470
	Item no.: 280-471 Insulation stop; 0.25 - 0.5 mm²; 5 pieces/strip; light gray	www.wago.com/280-471
	Item no.: 280-472 Insulation stop; 0.75 - 1 mm²; 5 pieces/strip	www.wago.com/280-472
End plate		
	Item no.: 280-340 End and intermediate plate; 2.5 mm thick; gray	www.wago.com/280-340
	Item no.: 280-341 End and intermediate plate; 2.5 mm thick; orange	www.wago.com/280-341
tools		
	Item no.: 210-720 Operating tool; Blade: 3.5 x 0.5 mm; with a partially insulated shaft	www.wago.com/210-720

Downloads

Documentation

Bid Text

280-503/281-581 doc - Datei	Feb 11, 2015	doc 26.1 kB	Download
280-503/281-581 X81 - Datei	Feb 19, 2019	xml 3.4 kB	Download

Additional Information

Disposal; Electrical and electronic equipment, Packaging	V 1.0.0	pdf 265.8 kB	Download

Subject to changes. Please also observe the further product documentation!

WAGO Kontakttechnik GmbH & Co. KG
Hansastr. 27
32423 Minden
Phone: +49571 887-0 | Fax: +49571 887-169
Email: info.de@wago.com | Web: www.wago.com

Do you have any questions about our products?
We are always happy to take your call at +49 (571) 887-44222.

CAD/CAE-Data

CAD data

2D/3D Models 280-503/281-581	URL	Download

CAE data

EPLAN Data Portal 280-503/281-581	URL	Download
WSCAD Universe 280-503/281-581	URL	Download

Installation Notes

WAGO Kontakttechnik GmbH & Co. KG
Hansastr. 27
32423 Minden
Phone: +49571 887-0 | Fax: +49571 887-169
Email: info.de@wago.com | Web: www.wago.com

Do you have any questions about our products?
We are always happy to take your call at +49 (571) 887-44222.