Data sheet | Item number: 280-875

4-conductor disconnect/test terminal block; with shield contact; with test port; for DIN-rail 35 x 15 and 35 x 7.5; 2.5 mm²; CAGE CLAMP®; 2,50 mm²; gray

www.wago.com/280-875

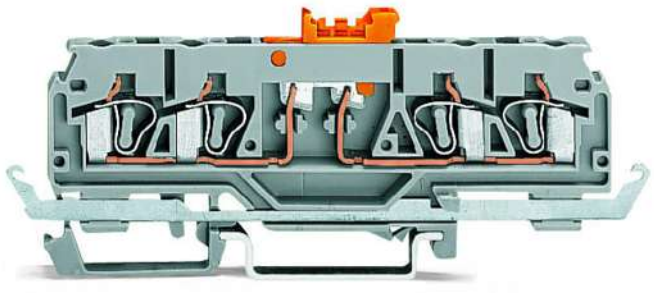

RoHS Compliant ✓ BOMcheck.net Color:

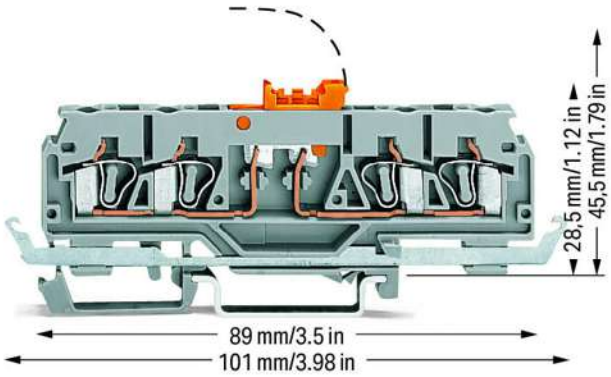

Item description

Note:
Terminating Aluminum Conductors
WAGO spring clamp terminal blocks are suitable for solid aluminum conductors up to 4 mm²/12 AWG if WAGO "Alu-Plus" Contact Paste is used for termination.

"Alu-Plus" Contact Paste Advantages:

- Automatically destroys the oxide film during clamping.
- Prevents fresh oxidation at the clamping point.
- Prevents electrolytic corrosion between aluminum and copper conductors (in the same terminal block).
- Provides long-term protection against corrosion.

Using terminal blocks with CAGE CLAMP® Spring Pressure Connection Technology, **aluminum conductors must first be cleaned with a blade** and then immediately be inserted into the clamping units filled with "Alu-Plus" Contact Paste.

It is also possible to apply WAGO "Alu-Plus" **additionally** on the whole surface of the aluminum conductor before termination.

Please note that the nominal currents must be adapted to the reduced conductivity of the aluminum conductors::
2.5 mm² = 16 A
4 mm² = 22 A

Subject to changes. Please also observe the further product documentation!

WAGO Kontakttechnik GmbH & Co. KG
Hansastr. 27
32423 Minden
Phone: +49571 887-0 | Fax: +49571 887-169
Email: info.de@wago.com | Web: www.wago.com

Do you have any questions about our products?
We are always happy to take your call at +49 (571) 887-44222.

Data
Electrical data

Ratings per IEC/EN 60664-1

Rated voltage (III / 3)	250 V
Rated impulse voltage (III / 3)	4 kV
Rated current	16 A
Legend (ratings)	(III / 3) ≙ Overvoltage category III / Pollution degree 3

Connection data

Connection technology	CAGE CLAMP®
Actuation type	Operating tool
Connectable conductor materials	Copper Aluminum
Solid conductor	0,08 … 2,5 mm² / 28 … 12 AWG
Fine-stranded conductor	0,08 … 2,5 mm² / 28 … 12 AWG
Strip length	8 … 9 mm / 0.31 … 0.35 inch
Total number of connection points	4
Total number of potentials	2
Number of levels	1
Type of wiring	Front-entry wiring
Note (conductor cross-section)	12 AWG: THHN, THWN

Geometrical Data

Width	5 mm / 0.197 inch
Height from upper-edge of DIN-35 rail	28,5 mm / 1.122 inch
Depth	101 mm / 3.976 inch

Mechanical data

Design	horizontal type
Type of mounting	DIN-35 rail
Marking level	Center/side marking

Material Data

Color	gray
Insulating material	Polyamide 66 (PA 66)

Subject to changes. Please also observe the further product documentation!

WAGO Kontakttechnik GmbH & Co. KG
Hansastr. 27
32423 Minden
Phone: +49571 887-0 | Fax: +49571 887-169
Email: info.de@wago.com | Web: www.wago.com

Do you have any questions about our products?
We are always happy to take your call at +49 (571) 887-44222.

Fire load	0.191 MJ
Weight	14.2 g

Commercial data

Product Group	1 (Rail Mounted Terminal Blocks)
Packaging type	BOX
Country of origin	CN
GTIN	4050821014676
Customs Tariff No.	85365080900

Approvals / Certificates

Country specific Approvals

Logo	Approval	Additional Approval Text	Certificate name
	CCA DEKRA Certification B.V.	EN 60947	2157201.01
	CSA DEKRA Certification B.V.	C22.2	1536071

Ship Approvals

Logo	Approval	Additional Approval Text	Certificate name
	ABS American Bureau of Shipping	EN 60947	20-HG1941090-PDA
	BV Bureau Veritas S.A.	EN 60947	07436/E0 BV
	DNV GL Det Norske Veritas, Germanischer Lloyd	-	TAE00001V2
	LR Lloyds Register	EN 60947	91/20112 (E9)

Subject to changes. Please also observe the further product documentation!

WAGO Kontakttechnik GmbH & Co. KG
Hansastr. 27
32423 Minden
Phone: +49571 887-0 | Fax: +49571 887-169
Email: info.de@wago.com | Web: www.wago.com

Do you have any questions about our products?
We are always happy to take your call at +49 (571) 887-44222.

UL-Approvals

Logo	Approval	Additional Approval Text	Certificate name
	UL Underwriters Laboratories Inc.	UL 1059	20170731-E45172

Counterpart

Compatible products

Insulation stop		
	Item no.: 280-470 Insulation stop; 0.08 - 0.2 mm² "s" (0.14 mm² "f-st"); 5 pieces/strip; white	www.wago.com/280-470
	Item no.: 280-471 Insulation stop; 0.25 - 0.5 mm²; 5 pieces/strip; light gray	www.wago.com/280-471
	Item no.: 280-472 Insulation stop; 0.75 - 1 mm²; 5 pieces/strip	www.wago.com/280-472
Marking accessories		
	Item no.: 2009-115 WMB-Inline; for Smart Printer; 1500 pieces on roll; stretchable 5 - 5.2 mm; plain; snap-on type; white	www.wago.com/2009-115
	Item no.: 2009-115/000-002 WMB-Inline; for Smart Printer; 1500 pieces on roll; stretchable 5 - 5.2 mm; plain; snap-on type; yellow	www.wago.com/2009-115/000-002
	Item no.: 2009-115/000-006 WMB-Inline; for Smart Printer; 1500 pieces on roll; stretchable 5 - 5.2 mm; plain; snap-on type; white	www.wago.com/2009-115/000-006

Subject to changes. Please also observe the further product documentation!

WAGO Kontakttechnik GmbH & Co. KG
Hansastr. 27
32423 Minden
Phone: +49571 887-0 | Fax: +49571 887-169
Email: info.de@wago.com | Web: www.wago.com

Do you have any questions about our products?
We are always happy to take your call at +49 (571) 887-44222.

	Item no.: 2009-115/000-007 WMB-Inline; for Smart Printer; 1500 pieces on roll; stretchable 5 - 5.2 mm; plain; snap-on type; gray	www.wago.com/2009-115/000-007
	Item no.: 2009-115/000-012 WMB-Inline; for Smart Printer; 1500 pieces on roll; stretchable 5 - 5.2 mm; plain; snap-on type; white	www.wago.com/2009-115/000-012
	Item no.: 2009-115/000-017 WMB-Inline; for Smart Printer; 1500 pieces on roll; stretchable 5 - 5.2 mm; plain; snap-on type; white	www.wago.com/2009-115/000-017
	Item no.: 2009-115/000-023 WMB-Inline; for Smart Printer; 1500 pieces on roll; stretchable 5 - 5.2 mm; plain; snap-on type; green	www.wago.com/2009-115/000-023
	Item no.: 2009-115/000-024 WMB-Inline; for Smart Printer; 1500 pieces on roll; stretchable 5 - 5.2 mm; plain; snap-on type; white	www.wago.com/2009-115/000-024
	Item no.: 2009-145 Mini-WSB Inline; for Smart Printer; 1700 pieces on roll; stretchable 5 - 5.2 mm; plain; snap-on type; white	www.wago.com/2009-145
	Item no.: 2009-145/000-002 Mini-WSB Inline; for Smart Printer; 1700 pieces on roll; stretchable 5 - 5.2 mm; plain; snap-on type; white	www.wago.com/2009-145/000-002
	Item no.: 2009-145/000-005 Mini-WSB Inline; for Smart Printer; 1700 pieces on roll; stretchable 5 - 5.2 mm; plain; snap-on type; red	www.wago.com/2009-145/000-005
	Item no.: 2009-145/000-006 Mini-WSB Inline; for Smart Printer; 1700 pieces on roll; stretchable 5 - 5.2 mm; plain; snap-on type; blue	www.wago.com/2009-145/000-006
	Item no.: 2009-145/000-007 Mini-WSB Inline; for Smart Printer; 1700 pieces on roll; stretchable 5 - 5.2 mm; plain; snap-on type; white	www.wago.com/2009-145/000-007
	Item no.: 2009-145/000-012 Mini-WSB Inline; for Smart Printer; 1700 pieces on roll; stretchable 5 - 5.2 mm; plain; snap-on type; orange	www.wago.com/2009-145/000-012
	Item no.: 2009-145/000-023 Mini-WSB Inline; for Smart Printer; 1700 pieces on roll; stretchable 5 - 5.2 mm; plain; snap-on type; green	www.wago.com/2009-145/000-023
	Item no.: 2009-145/000-024 Mini-WSB Inline; for Smart Printer; 1700 pieces on roll; stretchable 5 - 5.2 mm; plain; snap-on type; violet	www.wago.com/2009-145/000-024
	Item no.: 248-501 Miniature WSB Quick marking system; plain; Marker width 5 mm; 10 strips with 10 markers per card	www.wago.com/248-501

Subject to changes. Please also observe the further product documentation!

WAGO Kontakttechnik GmbH & Co. KG
Hansastr. 27
32423 Minden
Phone: +49571 887-0 | Fax: +49571 887-169
Email: info.de@wago.com | Web: www.wago.com

Do you have any questions about our products?
We are always happy to take your call at +49 (571) 887-44222.

Item no.: 248-501/000-002 Mini-WSB marking card; as card; not stretchable; plain; snap-on type; yellow	www.wago.com/248-501/000-002
Item no.: 248-501/000-005 Mini-WSB marking card; as card; not stretchable; plain; snap-on type; red	www.wago.com/248-501/000-005
Item no.: 248-501/000-006 Mini-WSB marking card; as card; not stretchable; plain; snap-on type; blue	www.wago.com/248-501/000-006
Item no.: 248-501/000-007 Mini-WSB marking card; as card; not stretchable; plain; snap-on type; gray	www.wago.com/248-501/000-007
Item no.: 248-501/000-012 Mini-WSB marking card; as card; not stretchable; plain; snap-on type; orange	www.wago.com/248-501/000-012
Item no.: 248-501/000-017 Mini-WSB marking card; as card; not stretchable; plain; snap-on type; light green	www.wago.com/248-501/000-017
Item no.: 248-501/000-023 Mini-WSB marking card; as card; not stretchable; plain; snap-on type; green	www.wago.com/248-501/000-023
Item no.: 248-501/000-024 Mini-WSB marking card; as card; not stretchable; plain; snap-on type; violet	www.wago.com/248-501/000-024
Item no.: 793-501 WMB marking card; as card; not stretchable; plain; snap-on type; white	www.wago.com/793-501
Item no.: 793-501/000-002 WMB marking card; as card; not stretchable; plain; snap-on type; yellow	www.wago.com/793-501/000-002
Item no.: 793-501/000-005 WMB marking card; as card; not stretchable; plain; snap-on type; red	www.wago.com/793-501/000-005
Item no.: 793-501/000-006 WMB marking card; as card; not stretchable; plain; snap-on type; blue	www.wago.com/793-501/000-006
Item no.: 793-501/000-007 WMB marking card; as card; not stretchable; plain; snap-on type; gray	www.wago.com/793-501/000-007
Item no.: 793-501/000-012 WMB marking card; as card; not stretchable; plain; snap-on type; orange	www.wago.com/793-501/000-012

Subject to changes. Please also observe the further product documentation!

WAGO Kontakttechnik GmbH & Co. KG
Hansastr. 27
32423 Minden
Phone: +49571 887-0 | Fax: +49571 887-169
Email: info.de@wago.com | Web: www.wago.com

Do you have any questions about our products?
We are always happy to take your call at +49 (571) 887-44222.

	Item no.: 793-501/000-017 WMB marking card; as card; not stretchable; plain; snap-on type; light green	www.wago.com/793-501/000-017
	Item no.: 793-501/000-023 WMB marking card; as card; not stretchable; plain; snap-on type; green	www.wago.com/793-501/000-023
	Item no.: 793-501/000-024 WMB marking card; as card; not stretchable; plain; snap-on type; violet	www.wago.com/793-501/000-024
	Item no.: 793-5501 WMB marking card; as card; for terminal block width 5 - 17.5 mm; stretchable 5 - 5.2 mm; plain; snap-on type; white	www.wago.com/793-5501
	Item no.: 793-5501/000-002 WMB marking card; as card; for terminal block width 5 - 17.5 mm; stretchable 5 - 5.2 mm; plain; snap-on type; yellow	www.wago.com/793-5501/000-002
	Item no.: 793-5501/000-005 WMB marking card; as card; for terminal block width 5 - 17.5 mm; stretchable 5 - 5.2 mm; plain; snap-on type; red	www.wago.com/793-5501/000-005
	Item no.: 793-5501/000-006 WMB marking card; as card; for terminal block width 5 - 17.5 mm; stretchable 5 - 5.2 mm; plain; snap-on type; blue	www.wago.com/793-5501/000-006
	Item no.: 793-5501/000-007 WMB marking card; as card; for terminal block width 5 - 17.5 mm; stretchable 5 - 5.2 mm; plain; snap-on type; gray	www.wago.com/793-5501/000-007
	Item no.: 793-5501/000-012 WMB marking card; as card; for terminal block width 5 - 17.5 mm; stretchable 5 - 5.2 mm; plain; snap-on type; orange	www.wago.com/793-5501/000-012
	Item no.: 793-5501/000-017 WMB marking card; as card; for terminal block width 5 - 17.5 mm; stretchable 5 - 5.2 mm; plain; snap-on type; green	www.wago.com/793-5501/000-017
	Item no.: 793-5501/000-023 WMB marking card; as card; for terminal block width 5 - 17.5 mm; stretchable 5 - 5.2 mm; plain; snap-on type; light green	www.wago.com/793-5501/000-023
	Item no.: 793-5501/000-024 WMB marking card; as card; for terminal block width 5 - 17.5 mm; stretchable 5 - 5.2 mm; plain; snap-on type; violet	www.wago.com/793-5501/000-024
tools		
	Item no.: 210-657 Operating tool; Blade: 3.5 x 0.5 mm; with a partially insulated shaft; short	www.wago.com/210-657

Subject to changes. Please also observe the further product documentation!

WAGO Kontakttechnik GmbH & Co. KG
Hansastr. 27
32423 Minden
Phone: +49571 887-0 | Fax: +49571 887-169
Email: info.de@wago.com | Web: www.wago.com

Do you have any questions about our products?
We are always happy to take your call at +49 (571) 887-44222.

	Item no.: 210-658 Operating tool; Blade: 3.5 x 0.5 mm; with a partially insulated shaft; angled; short	www.wago.com/210-658
	Item no.: 210-720 Operating tool; Blade: 3.5 x 0.5 mm; with a partially insulated shaft	www.wago.com/210-720

General accessories

	Item no.: 231-162/003-000 Male connector for rail-mount terminal blocks; 1.2 x 1.2 mm pins; straight; Pin spacing 5 mm; 2-pole; gray	www.wago.com/231-162/003-000
	Item no.: 231-163/003-000 Male connector for rail-mount terminal blocks; 1.2 x 1.2 mm pins; straight; Pin spacing 5 mm; 3-pole; gray	www.wago.com/231-163/003-000
	Item no.: 231-164/003-000 Male connector for rail-mount terminal blocks; 1.2 x 1.2 mm pins; straight; Pin spacing 5 mm; 4-pole; gray	www.wago.com/231-164/003-000
	Item no.: 231-165/003-000 Male connector for rail-mount terminal blocks; 1.2 x 1.2 mm pins; straight; Pin spacing 5 mm; 5-pole; gray	www.wago.com/231-165/003-000
	Item no.: 231-166/003-000 Male connector for rail-mount terminal blocks; 1.2 x 1.2 mm pins; straight; Pin spacing 5 mm; 6-pole; gray	www.wago.com/231-166/003-000
	Item no.: 231-167/003-000 Male connector for rail-mount terminal blocks; 1.2 x 1.2 mm pins; straight; Pin spacing 5 mm; 7-pole; gray	www.wago.com/231-167/003-000
	Item no.: 231-168/003-000 Male connector for rail-mount terminal blocks; 1.2 x 1.2 mm pins; straight; Pin spacing 5 mm; 8-pole; gray	www.wago.com/231-168/003-000
	Item no.: 231-169/003-000 Male connector for rail-mount terminal blocks; 1.2 x 1.2 mm pins; straight; Pin spacing 5 mm; 9-pole; gray	www.wago.com/231-169/003-000
	Item no.: 231-170/003-000 Male connector for rail-mount terminal blocks; 1.2 x 1.2 mm pins; straight; Pin spacing 5 mm; 10-pole; gray	www.wago.com/231-170/003-000
	Item no.: 231-171/003-000 Male connector for rail-mount terminal blocks; 1.2 x 1.2 mm pins; straight; Pin spacing 5 mm; 11-pole; gray	www.wago.com/231-171/003-000
	Item no.: 231-172/003-000 Male connector for rail-mount terminal blocks; 1.2 x 1.2 mm pins; straight; Pin spacing 5 mm; 12-pole; gray	www.wago.com/231-172/003-000
	Item no.: 231-176/003-000 Male connector for rail-mount terminal blocks; 1.2 x 1.2 mm pins; straight; Pin spacing 5 mm; 16-	

Subject to changes. Please also observe the further product documentation!

WAGO Kontakttechnik GmbH & Co. KG
Hansastr. 27
32423 Minden
Phone: +49571 887-0 | Fax: +49571 887-169
Email: info.de@wago.com | Web: www.wago.com

Do you have any questions about our products?
We are always happy to take your call at +49 (571) 887-44222.

	pole; gray	www.wago.com/231-176/003-000
	Item no.: 231-180/003-000 Male connector for rail-mount terminal blocks; 1.2 x 1.2 mm pins; straight; Pin spacing 5 mm; 20-pole; gray	www.wago.com/231-180/003-000
Female plug		
	Item no.: 232-132/005-000 Female connector for rail-mount terminal blocks; 0.6 x 1 mm pins; straight; Pin spacing 5 mm; 2-pole; gray	www.wago.com/232-132/005-000
	Item no.: 232-132/005-000/039-000 Female connector for rail-mount terminal blocks; 0.6 x 1 mm pins; straight; Locking lever; Pin spacing 5 mm; 2-pole; gray	www.wago.com/232-132/005-000/039-000
	Item no.: 232-133/005-000 Female connector for rail-mount terminal blocks; 0.6 x 1 mm pins; straight; Pin spacing 5 mm; 3-pole; gray	www.wago.com/232-133/005-000
	Item no.: 232-133/005-000/039-000 Female connector for rail-mount terminal blocks; 0.6 x 1 mm pins; straight; Locking lever; Pin spacing 5 mm; 3-pole; gray	www.wago.com/232-133/005-000/039-000
	Item no.: 232-134/005-000 Female connector for rail-mount terminal blocks; 0.6 x 1 mm pins; straight; Pin spacing 5 mm; 4-pole; gray	www.wago.com/232-134/005-000
	Item no.: 232-134/005-000/039-000 Female connector for rail-mount terminal blocks; 0.6 x 1 mm pins; straight; Locking lever; Pin spacing 5 mm; 4-pole; gray	www.wago.com/232-134/005-000/039-000
	Item no.: 232-135/005-000 Female connector for rail-mount terminal blocks; 0.6 x 1 mm pins; straight; Pin spacing 5 mm; 5-pole; gray	www.wago.com/232-135/005-000
	Item no.: 232-135/005-000/039-000 Female connector for rail-mount terminal blocks; 0.6 x 1 mm pins; straight; Locking lever; Pin spacing 5 mm; 5-pole; gray	www.wago.com/232-135/005-000/039-000
	Item no.: 232-136/005-000 Female connector for rail-mount terminal blocks; 0.6 x 1 mm pins; straight; Pin spacing 5 mm; 6-pole; gray	www.wago.com/232-136/005-000
	Item no.: 232-136/005-000/039-000 Female connector for rail-mount terminal blocks; 0.6 x 1 mm pins; straight; Locking lever; Pin spacing 5 mm; 6-pole; gray	www.wago.com/232-136/005-000/039-000
	Item no.: 232-137/005-000 Female connector for rail-mount terminal blocks; 0.6 x 1 mm pins; straight; Pin spacing 5 mm; 7-pole; gray	www.wago.com/232-137/005-000

Subject to changes. Please also observe the further product documentation!

WAGO Kontakttechnik GmbH & Co. KG
Hansastr. 27
32423 Minden
Phone: +49571 887-0 | Fax: +49571 887-169
Email: info.de@wago.com | Web: www.wago.com

Do you have any questions about our products?
We are always happy to take your call at +49 (571) 887-44222.

	Item no.: 232-137/005-000/039-000 Female connector for rail-mount terminal blocks; 0.6 x 1 mm pins; straight; Locking lever; Pin spacing 5 mm; 7-pole; gray	www.wago.com/232-137/005-000/039-000
	Item no.: 232-138/005-000 Female connector for rail-mount terminal blocks; 0.6 x 1 mm pins; straight; Pin spacing 5 mm; 8-pole; gray	www.wago.com/232-138/005-000
	Item no.: 232-138/005-000/039-000 Female connector for rail-mount terminal blocks; 0.6 x 1 mm pins; straight; Locking lever; Pin spacing 5 mm; 8-pole; gray	www.wago.com/232-138/005-000/039-000
	Item no.: 232-139/005-000 Female connector for rail-mount terminal blocks; 0.6 x 1 mm pins; straight; Pin spacing 5 mm; 9-pole; gray	www.wago.com/232-139/005-000
	Item no.: 232-139/005-000/039-000 Female connector for rail-mount terminal blocks; 0.6 x 1 mm pins; straight; Locking lever; Pin spacing 5 mm; 9-pole; gray	www.wago.com/232-139/005-000/039-000
	Item no.: 232-140/005-000 Female connector for rail-mount terminal blocks; 0.6 x 1 mm pins; straight; Pin spacing 5 mm; 10-pole; gray	www.wago.com/232-140/005-000
	Item no.: 232-140/005-000/039-000 Female connector for rail-mount terminal blocks; 0.6 x 1 mm pins; straight; Locking lever; Pin spacing 5 mm; 10-pole; gray	www.wago.com/232-140/005-000/039-000
	Item no.: 232-142/005-000 Female connector for rail-mount terminal blocks; 0.6 x 1 mm pins; straight; Pin spacing 5 mm; 12-pole; gray	www.wago.com/232-142/005-000
	Item no.: 232-142/005-000/039-000 Female connector for rail-mount terminal blocks; 0.6 x 1 mm pins; straight; Locking lever; Pin spacing 5 mm; 12-pole; gray	www.wago.com/232-142/005-000/039-000
	Item no.: 232-146/005-000 Female connector for rail-mount terminal blocks; 0.6 x 1 mm pins; straight; Pin spacing 5 mm; 16-pole; gray	www.wago.com/232-146/005-000
	Item no.: 232-146/005-000/039-000 Female connector for rail-mount terminal blocks; 0.6 x 1 mm pins; straight; Locking lever; Pin spacing 5 mm; 16-pole; gray	www.wago.com/232-146/005-000/039-000
	Item no.: 232-147/005-000/039-000 Female connector for rail-mount terminal blocks; 0.6 x 1 mm pins; straight; Locking lever; Pin spacing 5 mm; 17-pole; gray	www.wago.com/232-147/005-000/039-000
	Item no.: 232-150/005-000 Female connector for rail-mount terminal blocks; 0.6 x 1 mm pins; straight; Pin spacing 5 mm; 20-pole; gray	www.wago.com/232-150/005-000

Item no.: 232-150/005-000/039-000

Subject to changes. Please also observe the further product documentation!

WAGO Kontakttechnik GmbH & Co. KG
Hansastr. 27
32423 Minden
Phone: +49571 887-0 | Fax: +49571 887-169
Email: info.de@wago.com | Web: www.wago.com

Do you have any questions about our products?
We are always happy to take your call at +49 (571) 887-44222.

	Female connector for rail-mount terminal blocks; 0.6 x 1 mm pins; straight; Locking lever; Pin spacing 5 mm; 20-pole; gray	www.wago.com/232-150/005-000/039-000
	Item no.: 232-232/005-000 Female connector for rail-mount terminal blocks; 0.6 x 1 mm pins; angled; Pin spacing 5 mm; 2-pole; gray	www.wago.com/232-232/005-000
	Item no.: 232-232/005-000/039-000 Female connector for rail-mount terminal blocks; 0.6 x 1 mm pins; angled; Locking lever; Pin spacing 5 mm; 2-pole; gray	www.wago.com/232-232/005-000/039-000
	Item no.: 232-233/005-000 Female connector for rail-mount terminal blocks; 0.6 x 1 mm pins; angled; Pin spacing 5 mm; 3-pole; gray	www.wago.com/232-233/005-000
	Item no.: 232-233/005-000/039-000 Female connector for rail-mount terminal blocks; 0.6 x 1 mm pins; angled; Locking lever; Pin spacing 5 mm; 3-pole; gray	www.wago.com/232-233/005-000/039-000
	Item no.: 232-234/005-000 Female connector for rail-mount terminal blocks; 0.6 x 1 mm pins; angled; Pin spacing 5 mm; 4-pole; gray	www.wago.com/232-234/005-000
	Item no.: 232-234/005-000/039-000 Female connector for rail-mount terminal blocks; 0.6 x 1 mm pins; angled; Locking lever; Pin spacing 5 mm; 4-pole; gray	www.wago.com/232-234/005-000/039-000
	Item no.: 232-235/005-000 Female connector for rail-mount terminal blocks; 0.6 x 1 mm pins; angled; Pin spacing 5 mm; 5-pole; gray	www.wago.com/232-235/005-000
	Item no.: 232-235/005-000/039-000 Female connector for rail-mount terminal blocks; 0.6 x 1 mm pins; angled; Locking lever; Pin spacing 5 mm; 5-pole; gray	www.wago.com/232-235/005-000/039-000
	Item no.: 232-236/005-000 Female connector for rail-mount terminal blocks; 0.6 x 1 mm pins; angled; Pin spacing 5 mm; 6-pole; gray	www.wago.com/232-236/005-000
	Item no.: 232-236/005-000/039-000 Female connector for rail-mount terminal blocks; 0.6 x 1 mm pins; angled; Locking lever; Pin spacing 5 mm; 6-pole; gray	www.wago.com/232-236/005-000/039-000
	Item no.: 232-237/005-000 Female connector for rail-mount terminal blocks; 0.6 x 1 mm pins; angled; Pin spacing 5 mm; 7-pole; gray	www.wago.com/232-237/005-000
	Item no.: 232-238/005-000 Female connector for rail-mount terminal blocks; 0.6 x 1 mm pins; angled; Pin spacing 5 mm; 8-pole; gray	www.wago.com/232-238/005-000
	Item no.: 232-239/005-000	

Subject to changes. Please also observe the further product documentation!

WAGO Kontakttechnik GmbH & Co. KG
Hansastr. 27
32423 Minden
Phone: +49571 887-0 | Fax: +49571 887-169
Email: info.de@wago.com | Web: www.wago.com

Do you have any questions about our products?
We are always happy to take your call at +49 (571) 887-44222.

	Female connector for rail-mount terminal blocks; 0.6 x 1 mm pins; angled; Pin spacing 5 mm; 9-pole; gray	www.wago.com/232-239/005-000
	Item no.: 232-240/005-000 Female connector for rail-mount terminal blocks; 0.6 x 1 mm pins; angled; Pin spacing 5 mm; 10-pole; gray	www.wago.com/232-240/005-000
	Item no.: 232-240/005-000/039-000 Female connector for rail-mount terminal blocks; 0.6 x 1 mm pins; angled; Locking lever; Pin spacing 5 mm; 10-pole; gray	www.wago.com/232-240/005-000/039-000
	Item no.: 232-242/005-000 Female connector for rail-mount terminal blocks; 0.6 x 1 mm pins; angled; Pin spacing 5 mm; 12-pole; gray	www.wago.com/232-242/005-000
	Item no.: 232-242/005-000/039-000 Female connector for rail-mount terminal blocks; 0.6 x 1 mm pins; angled; Locking lever; Pin spacing 5 mm; 12-pole; gray	www.wago.com/232-242/005-000/039-000
	Item no.: 232-246/005-000 Female connector for rail-mount terminal blocks; 0.6 x 1 mm pins; angled; Pin spacing 5 mm; 16-pole; gray	www.wago.com/232-246/005-000
	Item no.: 232-246/005-000/039-000 Female connector for rail-mount terminal blocks; 0.6 x 1 mm pins; angled; Locking lever; Pin spacing 5 mm; 16-pole; gray	www.wago.com/232-246/005-000/039-000
	Item no.: 232-250/005-000 Female connector for rail-mount terminal blocks; 0.6 x 1 mm pins; angled; Pin spacing 5 mm; 20-pole; gray	www.wago.com/232-250/005-000
	Item no.: 232-250/005-000/039-000 Female connector for rail-mount terminal blocks; 0.6 x 1 mm pins; angled; Locking lever; Pin spacing 5 mm; 20-pole; gray	www.wago.com/232-250/005-000/039-000
	Item no.: 232-732/005-000 THT female header; 0.6 x 1.0 mm solder pin; gray	www.wago.com/232-732/005-000
	Item no.: 232-733/005-000 THT female header; 0.6 x 1.0 mm solder pin; gray	www.wago.com/232-733/005-000
	Item no.: 232-734/005-000 THT female header; 0.6 x 1.0 mm solder pin; gray	www.wago.com/232-734/005-000
	Item no.: 232-734/005-000/039-000 THT female header; 0.6 x 1.0 mm solder pin; gray	www.wago.com/232-734/005-000/039-000

Subject to changes. Please also observe the further product documentation!

WAGO Kontakttechnik GmbH & Co. KG
Hansastr. 27
32423 Minden
Phone: +49571 887-0 | Fax: +49571 887-169
Email: info.de@wago.com | Web: www.wago.com

Do you have any questions about our products?
We are always happy to take your call at +49 (571) 887-44222.

	Item no.: 232-735/005-000 THT female header; 0.6 x 1.0 mm solder pin; gray	www.wago.com/232-735/005-000
	Item no.: 232-735/005-000/039-000 THT female header; 0.6 x 1.0 mm solder pin; gray	www.wago.com/232-735/005-000/039-000
	Item no.: 232-736/005-000 THT female header; 0.6 x 1.0 mm solder pin; gray	www.wago.com/232-736/005-000
	Item no.: 232-736/005-000/039-000 THT female header; 0.6 x 1.0 mm solder pin; gray	www.wago.com/232-736/005-000/039-000
	Item no.: 232-738/005-000 THT female header; 0.6 x 1.0 mm solder pin; gray	www.wago.com/232-738/005-000
	Item no.: 232-740/005-000 THT female header; 0.6 x 1.0 mm solder pin; gray	www.wago.com/232-740/005-000
	Item no.: 232-742/005-000 THT female header; 0.6 x 1.0 mm solder pin; gray	www.wago.com/232-742/005-000
	Item no.: 232-832/005-000 THT female header; 0.6 x 1.0 mm solder pin; angled; Pin spacing 7.5 mm; 2-pole; gray	www.wago.com/232-832/005-000
	Item no.: 232-833/005-000 THT female header; 0.6 x 1.0 mm solder pin; angled; Pin spacing 7.5 mm; 3-pole; gray	www.wago.com/232-833/005-000
	Item no.: 232-834/005-000 THT female header; 0.6 x 1.0 mm solder pin; angled; Pin spacing 7.5 mm; 4-pole; gray	www.wago.com/232-834/005-000
	Item no.: 232-836/005-000 THT female header; 0.6 x 1.0 mm solder pin; angled; Pin spacing 7.5 mm; 6-pole; gray	www.wago.com/232-836/005-000
	Item no.: 232-836/005-000/039-000 THT female header; 0.6 x 1.0 mm solder pin; angled; Locking lever; Pin spacing 7.5 mm; 6-pole; gray	www.wago.com/232-836/005-000/039-000
	Item no.: 232-840/005-000 THT female header; 0.6 x 1.0 mm solder pin; angled; Pin spacing 7.5 mm; 10-pole; gray	www.wago.com/232-840/005-000

Subject to changes. Please also observe the further product documentation!

WAGO Kontakttechnik GmbH & Co. KG
Hansastr. 27
32423 Minden
Phone: +49571 887-0 | Fax: +49571 887-169
Email: info.de@wago.com | Web: www.wago.com

Do you have any questions about our products?
We are always happy to take your call at +49 (571) 887-44222.

	Item no.: 232-842/005-000 THT female header; 0.6 x 1.0 mm solder pin; angled; Pin spacing 7.5 mm; 12-pole; gray	www.wago.com/232-842/005-000
	Item no.: 722-132/005-000 Female connector for rail-mount terminal blocks; 0.6 x 1 mm pins; straight; 100% protected against mismating; Pin spacing 5 mm; 2-pole; light gray	www.wago.com/722-132/005-000
	Item no.: 722-132/005-000/039-000 Female connector for rail-mount terminal blocks; 0.6 x 1 mm pins; straight; 100% protected against mismating; Locking lever; Pin spacing 5 mm; 2-pole; light gray	www.wago.com/722-132/005-000/039-000
	Item no.: 722-133/005-000 Female connector for rail-mount terminal blocks; 0.6 x 1 mm pins; straight; 100% protected against mismating; Pin spacing 5 mm; 3-pole; light gray	www.wago.com/722-133/005-000
	Item no.: 722-133/005-000/039-000 Female connector for rail-mount terminal blocks; 0.6 x 1 mm pins; straight; 100% protected against mismating; Locking lever; Pin spacing 5 mm; 3-pole; light gray	www.wago.com/722-133/005-000/039-000
	Item no.: 722-134/005-000 Female connector for rail-mount terminal blocks; 0.6 x 1 mm pins; straight; 100% protected against mismating; Pin spacing 5 mm; 4-pole; light gray	www.wago.com/722-134/005-000
	Item no.: 722-134/005-000/039-000 Female connector for rail-mount terminal blocks; 0.6 x 1 mm pins; straight; 100% protected against mismating; Locking lever; Pin spacing 5 mm; 4-pole; light gray	www.wago.com/722-134/005-000/039-000
	Item no.: 722-135/005-000 Female connector for rail-mount terminal blocks; 0.6 x 1 mm pins; straight; 100% protected against mismating; Pin spacing 5 mm; 5-pole; light gray	www.wago.com/722-135/005-000
	Item no.: 722-135/005-000/039-000 Female connector for rail-mount terminal blocks; 0.6 x 1 mm pins; straight; 100% protected against mismating; Locking lever; Pin spacing 5 mm; 5-pole; light gray	www.wago.com/722-135/005-000/039-000
	Item no.: 722-136/005-000 Female connector for rail-mount terminal blocks; 0.6 x 1 mm pins; straight; 100% protected against mismating; Pin spacing 5 mm; 6-pole; light gray	www.wago.com/722-136/005-000
	Item no.: 722-136/005-000/039-000 Female connector for rail-mount terminal blocks; 0.6 x 1 mm pins; straight; 100% protected against mismating; Locking lever; Pin spacing 5 mm; 6-pole; light gray	www.wago.com/722-136/005-000/039-000
	Item no.: 722-137/005-000 Female connector for rail-mount terminal blocks; 0.6 x 1 mm pins; straight; 100% protected against mismating; Pin spacing 5 mm; 7-pole; light gray	www.wago.com/722-137/005-000
	Item no.: 722-137/005-000/039-000 Female connector for rail-mount terminal blocks; 0.6 x 1 mm pins; straight; 100% protected against mismating; Locking lever; Pin spacing 5 mm; 7-pole; light gray	www.wago.com/722-137/005-000/039-000

Item no.: 722-138/005-000

Subject to changes. Please also observe the further product documentation!

WAGO Kontakttechnik GmbH & Co. KG
Hansastr. 27
32423 Minden
Phone: +49571 887-0 | Fax: +49571 887-169
Email: info.de@wago.com | Web: www.wago.com

Do you have any questions about our products?
We are always happy to take your call at +49 (571) 887-44222.

	Female connector for rail-mount terminal blocks; 0.6 x 1 mm pins; straight; 100% protected against mismating; Pin spacing 5 mm; 8-pole; light gray	www.wago.com/722-138/005-000
	Item no.: 722-138/005-000/039-000 Female connector for rail-mount terminal blocks; 0.6 x 1 mm pins; straight; 100% protected against mismating; Locking lever; Pin spacing 5 mm; 8-pole; light gray	www.wago.com/722-138/005-000/039-000
	Item no.: 722-139/005-000 Female connector for rail-mount terminal blocks; 0.6 x 1 mm pins; straight; 100% protected against mismating; Pin spacing 5 mm; 9-pole; light gray	www.wago.com/722-139/005-000
	Item no.: 722-139/005-000/039-000 Female connector for rail-mount terminal blocks; 0.6 x 1 mm pins; straight; 100% protected against mismating; Locking lever; Pin spacing 5 mm; 9-pole; light gray	www.wago.com/722-139/005-000/039-000
	Item no.: 722-140/005-000 Female connector for rail-mount terminal blocks; 0.6 x 1 mm pins; straight; 100% protected against mismating; Pin spacing 5 mm; 10-pole; light gray	www.wago.com/722-140/005-000
	Item no.: 722-140/005-000/039-000 Female connector for rail-mount terminal blocks; 0.6 x 1 mm pins; straight; 100% protected against mismating; Locking lever; Pin spacing 5 mm; 10-pole; light gray	www.wago.com/722-140/005-000/039-000
	Item no.: 722-141/005-000 Female connector for rail-mount terminal blocks; 0.6 x 1 mm pins; straight; 100% protected against mismating; Pin spacing 5 mm; 11-pole; light gray	www.wago.com/722-141/005-000
	Item no.: 722-142/005-000 Female connector for rail-mount terminal blocks; 0.6 x 1 mm pins; straight; 100% protected against mismating; Pin spacing 5 mm; 12-pole; light gray	www.wago.com/722-142/005-000
	Item no.: 722-142/005-007/039-000 Female connector for rail-mount terminal blocks; gray	www.wago.com/722-142/005-007/039-000
	Item no.: 722-143/005-000 Female connector for rail-mount terminal blocks; 0.6 x 1 mm pins; straight; 100% protected against mismating; Pin spacing 5 mm; 13-pole; light gray	www.wago.com/722-143/005-000
	Item no.: 722-144/005-000 Female connector for rail-mount terminal blocks; 0.6 x 1 mm pins; straight; 100% protected against mismating; Pin spacing 5 mm; 14-pole; light gray	www.wago.com/722-144/005-000
	Item no.: 722-144/005-000/039-000 Female connector for rail-mount terminal blocks; 0.6 x 1 mm pins; straight; 100% protected against mismating; Locking lever; Pin spacing 5 mm; 14-pole; light gray	www.wago.com/722-144/005-000/039-000
	Item no.: 722-145/005-000 Female connector for rail-mount terminal blocks; 0.6 x 1 mm pins; straight; 100% protected against mismating; Pin spacing 5 mm; 15-pole; light gray	www.wago.com/722-145/005-000
	Item no.: 722-146/005-000	

Subject to changes. Please also observe the further product documentation!

WAGO Kontakttechnik GmbH & Co. KG
Hansastr. 27
32423 Minden
Phone: +49571 887-0 | Fax: +49571 887-169
Email: info.de@wago.com | Web: www.wago.com

Do you have any questions about our products?
We are always happy to take your call at +49 (571) 887-44222.

	Female connector for rail-mount terminal blocks; 0.6 x 1 mm pins; straight; 100% protected against mismating; Pin spacing 5 mm; 16-pole; light gray	www.wago.com/722-146/005-000
	Item no.: 722-146/005-000/039-000 Female connector for rail-mount terminal blocks; 0.6 x 1 mm pins; straight; 100% protected against mismating; Locking lever; Pin spacing 5 mm; 16-pole; light gray	www.wago.com/722-146/005-000/039-000
	Item no.: 722-150/005-000 Female connector for rail-mount terminal blocks; 0.6 x 1 mm pins; straight; 100% protected against mismating; Pin spacing 5 mm; 20-pole; light gray	www.wago.com/722-150/005-000
	Item no.: 722-150/005-000/039-000 Female connector for rail-mount terminal blocks; 0.6 x 1 mm pins; straight; 100% protected against mismating; Locking lever; Pin spacing 5 mm; 20-pole; light gray	www.wago.com/722-150/005-000/039-000
	Item no.: 722-232/005-000 Female connector for rail-mount terminal blocks; 0.6 x 1 mm pins; angled; 100% protected against mismating; Pin spacing 5 mm; 2-pole; light gray	www.wago.com/722-232/005-000
	Item no.: 722-232/005-000/039-000 Female connector for rail-mount terminal blocks; 0.6 x 1 mm pins; angled; 100% protected against mismating; Locking lever; Pin spacing 5 mm; 2-pole; light gray	www.wago.com/722-232/005-000/039-000
	Item no.: 722-233/005-000 Female connector for rail-mount terminal blocks; 0.6 x 1 mm pins; angled; 100% protected against mismating; Pin spacing 5 mm; 3-pole; light gray	www.wago.com/722-233/005-000
	Item no.: 722-233/005-000/039-000 Female connector for rail-mount terminal blocks; 0.6 x 1 mm pins; angled; 100% protected against mismating; Locking lever; Pin spacing 5 mm; 3-pole; light gray	www.wago.com/722-233/005-000/039-000
	Item no.: 722-234/005-000 Female connector for rail-mount terminal blocks; 0.6 x 1 mm pins; angled; 100% protected against mismating; Pin spacing 5 mm; 4-pole; light gray	www.wago.com/722-234/005-000
	Item no.: 722-234/005-000/039-000 Female connector for rail-mount terminal blocks; 0.6 x 1 mm pins; angled; 100% protected against mismating; Locking lever; Pin spacing 5 mm; 4-pole; light gray	www.wago.com/722-234/005-000/039-000
	Item no.: 722-235/005-000 Female connector for rail-mount terminal blocks; 0.6 x 1 mm pins; angled; 100% protected against mismating; Pin spacing 5 mm; 5-pole; light gray	www.wago.com/722-235/005-000
	Item no.: 722-235/005-000/039-000 Female connector for rail-mount terminal blocks; 0.6 x 1 mm pins; angled; 100% protected against mismating; Locking lever; Pin spacing 5 mm; 5-pole; light gray	www.wago.com/722-235/005-000/039-000
	Item no.: 722-236/005-000 Female connector for rail-mount terminal blocks; 0.6 x 1 mm pins; angled; 100% protected against mismating; Pin spacing 5 mm; 6-pole; light gray	www.wago.com/722-236/005-000

Item no.: 722-236/005-000/039-000

Subject to changes. Please also observe the further product documentation!

WAGO Kontakttechnik GmbH & Co. KG
Hansastr. 27
32423 Minden
Phone: +49571 887-0 | Fax: +49571 887-169
Email: info.de@wago.com | Web: www.wago.com

Do you have any questions about our products?
We are always happy to take your call at +49 (571) 887-44222.

	Female connector for rail-mount terminal blocks; 0.6 x 1 mm pins; angled; 100% protected against mismating; Locking lever; Pin spacing 5 mm; 6-pole; light gray	www.wago.com/722-236/005-000/039-000
	Item no.: 722-237/005-000 Female connector for rail-mount terminal blocks; 0.6 x 1 mm pins; angled; 100% protected against mismating; Pin spacing 5 mm; 7-pole; light gray	www.wago.com/722-237/005-000
	Item no.: 722-237/005-000/039-000 Female connector for rail-mount terminal blocks; 0.6 x 1 mm pins; angled; 100% protected against mismating; Locking lever; Pin spacing 5 mm; 7-pole; light gray	www.wago.com/722-237/005-000/039-000
	Item no.: 722-238/005-000 Female connector for rail-mount terminal blocks; 0.6 x 1 mm pins; angled; 100% protected against mismating; Pin spacing 5 mm; 8-pole; light gray	www.wago.com/722-238/005-000
	Item no.: 722-239/005-000 Female connector for rail-mount terminal blocks; 0.6 x 1 mm pins; angled; 100% protected against mismating; Pin spacing 5 mm; 9-pole; light gray	www.wago.com/722-239/005-000
	Item no.: 722-239/005-000/039-000 Female connector for rail-mount terminal blocks; 0.6 x 1 mm pins; angled; 100% protected against mismating; Locking lever; Pin spacing 5 mm; 9-pole; light gray	www.wago.com/722-239/005-000/039-000
	Item no.: 722-240/005-000 Female connector for rail-mount terminal blocks; 0.6 x 1 mm pins; angled; 100% protected against mismating; Pin spacing 5 mm; 10-pole; light gray	www.wago.com/722-240/005-000
	Item no.: 722-240/005-000/039-000 Female connector for rail-mount terminal blocks; 0.6 x 1 mm pins; angled; 100% protected against mismating; Locking lever; Pin spacing 5 mm; 10-pole; light gray	www.wago.com/722-240/005-000/039-000
	Item no.: 722-241/005-000 Female connector for rail-mount terminal blocks; 0.6 x 1 mm pins; angled; 100% protected against mismating; Pin spacing 5 mm; 11-pole; light gray	www.wago.com/722-241/005-000
	Item no.: 722-242/005-000 Female connector for rail-mount terminal blocks; 0.6 x 1 mm pins; angled; 100% protected against mismating; Pin spacing 5 mm; 12-pole; light gray	www.wago.com/722-242/005-000
	Item no.: 722-242/005-000/039-000 Female connector for rail-mount terminal blocks; 0.6 x 1 mm pins; angled; 100% protected against mismating; Locking lever; Pin spacing 5 mm; 12-pole; light gray	www.wago.com/722-242/005-000/039-000
	Item no.: 722-243/005-000 Female connector for rail-mount terminal blocks; 0.6 x 1 mm pins; angled; 100% protected against mismating; Pin spacing 5 mm; 13-pole; light gray	www.wago.com/722-243/005-000
	Item no.: 722-244/005-000 Female connector for rail-mount terminal blocks; 0.6 x 1 mm pins; angled; 100% protected against mismating; Pin spacing 5 mm; 14-pole; light gray	www.wago.com/722-244/005-000
	Item no.: 722-244/005-000/039-000	

Subject to changes. Please also observe the further product documentation!

WAGO Kontakttechnik GmbH & Co. KG
Hansastr. 27
32423 Minden
Phone: +49571 887-0 | Fax: +49571 887-169
Email: info.de@wago.com | Web: www.wago.com

Do you have any questions about our products?
We are always happy to take your call at +49 (571) 887-44222.

	Female connector for rail-mount terminal blocks; 0.6 x 1 mm pins; angled; 100% protected against mismating; Locking lever; Pin spacing 5 mm; 14-pole; light gray	www.wago.com/722-244/005-000/039-000
	Item no.: 722-246/005-000 Female connector for rail-mount terminal blocks; 0.6 x 1 mm pins; angled; 100% protected against mismating; Pin spacing 5 mm; 16-pole; light gray	www.wago.com/722-246/005-000
	Item no.: 722-246/005-000/039-000 Female connector for rail-mount terminal blocks; 0.6 x 1 mm pins; angled; 100% protected against mismating; Locking lever; Pin spacing 5 mm; 16-pole; light gray	www.wago.com/722-246/005-000/039-000
	Item no.: 722-250/005-000 Female connector for rail-mount terminal blocks; 0.6 x 1 mm pins; angled; 100% protected against mismating; Pin spacing 5 mm; 20-pole; light gray	www.wago.com/722-250/005-000
check		
	Item no.: 210-136 Test plug; 2 mm Ø; with 500 mm cable; red	www.wago.com/210-136
	Item no.: 210-137 Test plug; 2.3 mm Ø; with 500 mm cable; yellow	www.wago.com/210-137
	Item no.: 249-141 L-type test plug module; modular; with spring-loaded contact pin; Center module; 1,50 mm²; gray	www.wago.com/249-141
assembling		
	Item no.: 209-106 Mounting carrier; for isolated mounting on DIN 35 rails; gray	www.wago.com/209-106
	Item no.: 709-153 Cover; Type 1; suitable for cover carrier, type 1; 1 m long; transparent	www.wago.com/709-153
ferrule		
	Item no.: 216-101 Ferrule; Sleeve for 0.5 mm² / AWG 22; uninsulated; electro-tin plated	www.wago.com/216-101
	Item no.: 216-102 Ferrule; Sleeve for 0.75 mm² / AWG 20; uninsulated; electro-tin plated	www.wago.com/216-102
	Item no.: 216-103 Ferrule; Sleeve for 1 mm² / AWG 18; uninsulated; electro-tin plated	www.wago.com/216-103
	Item no.: 216-104 Ferrule; Sleeve for 1.5 mm² / AWG 16; uninsulated; electro-tin plated	www.wago.com/216-104
	Item no.: 216-201 Ferrule; Sleeve for 0.5 mm² / 20 AWG; insulated; electro-tin plated; white	www.wago.com/216-201
	Item no.: 216-202 Ferrule; Sleeve for 0.75 mm² / 18 AWG; insulated; electro-tin plated; gray	www.wago.com/216-202
	Item no.: 216-203 Ferrule; Sleeve for 1 mm² / AWG 18; insulated; electro-tin plated; red	www.wago.com/216-203

Subject to changes. Please also observe the further product documentation!

WAGO Kontakttechnik GmbH & Co. KG
Hansastr. 27
32423 Minden
Phone: +49571 887-0 | Fax: +49571 887-169
Email: info.de@wago.com | Web: www.wago.com

Do you have any questions about our products?
We are always happy to take your call at +49 (571) 887-44222.

	Item no.: 216-204 Ferrule; Sleeve for 1.5 mm² / AWG 16; insulated; electro-tin plated; black	www.wago.com/216-204
	Item no.: 216-301 Ferrule; Sleeve for 0.25 mm² / AWG 24; insulated; electro-tin plated; yellow	www.wago.com/216-301
	Item no.: 216-302 Ferrule; Sleeve for 0.34 mm² / 22 AWG; insulated; electro-tin plated; green	www.wago.com/216-302
Jumper		
	Item no.: 210-103 Wire commoning chain; insulated; 50 connections; black	www.wago.com/210-103
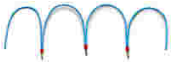	**Item no.: 210-123** Wire commoning chain; insulated; 50 connections	www.wago.com/210-123
	Item no.: 249-123 Push-in type wire jumper; insulated; wire length 180 mm; Conductor cross section 0.75 mm²	www.wago.com/249-123
	Item no.: 249-125 Push-in type wire jumper; insulated; wire length 60 mm; Conductor cross section 0.75 mm²	www.wago.com/249-125
	Item no.: 249-126 Push-in type wire jumper; insulated; wire length 110 mm; Conductor cross section 0.75 mm²	www.wago.com/249-126
	Item no.: 249-127 Push-in type wire jumper; insulated; wire length 250 mm; Conductor cross section 0.75 mm²	www.wago.com/249-127
	Item no.: 280-482 Comb-style jumper bar; insulated; 2-way; IN = IN terminal block; gray	www.wago.com/280-482
	Item no.: 280-483 Comb-style jumper bar; insulated; 3-way; IN = IN terminal block; gray	www.wago.com/280-483
	Item no.: 280-484 Comb-style jumper bar; insulated; 4-way; IN = IN terminal block; gray	www.wago.com/280-484
	Item no.: 280-485 Comb-style jumper bar; insulated; 5-way; IN = IN terminal block; gray	www.wago.com/280-485
	Item no.: 280-490 Comb-style jumper bar; insulated; 10-way; IN = IN terminal block; gray	www.wago.com/280-490
	Item no.: 280-492 Alternate comb-style jumper bar; insulated; 2-way; IN = IN terminal block; gray	www.wago.com/280-492
	Item no.: 709-110 Wire commoning chain; insulated; 4 connections; 3 x 110 mm; black	www.wago.com/709-110
	Item no.: 709-111 Wire commoning chain; insulated; 3 connections; 2 x 120 mm; black	www.wago.com/709-111
	Item no.: 709-112 Wire commoning chain; insulated; 3 connections; 2 x 170 mm; black	www.wago.com/709-112

Subject to changes. Please also observe the further product documentation!

WAGO Kontakttechnik GmbH & Co. KG
Hansastr. 27
32423 Minden
Phone: +49571 887-0 | Fax: +49571 887-169
Email: info.de@wago.com | Web: www.wago.com

Do you have any questions about our products?
We are always happy to take your call at +49 (571) 887-44222.

Protective Warning Marker		
	Item no.: 280-415 Protective warning marker; with high-voltage symbol, black; for 5 terminal blocks; yellow	www.wago.com/280-415
End plate		
	Item no.: 280-373 End and intermediate plate; 2.5 mm thick; orange	www.wago.com/280-373
	Item no.: 280-376 End and intermediate plate; 2.5 mm thick; gray	www.wago.com/280-376
Carrier rail		
	Item no.: 210-112 Steel carrier rail; 35 x 7.5 mm; 1 mm thick; 2 m long; slotted; according to EN 60715; "Hole width 25 mm	www.wago.com/210-112
	Item no.: 210-113 Steel carrier rail; 35 x 7.5 mm; 1 mm thick; 2 m long; unslotted; according to EN 60715	www.wago.com/210-113
	Item no.: 210-114 Steel carrier rail; 35 x 15 mm; 1.5 mm thick; 2 m long; unslotted; similar to EN 60715	www.wago.com/210-114
	Item no.: 210-115 Steel carrier rail; 35 x 7.5 mm; 1 mm thick; 2 m long; slotted; according to EN 60715; "Hole width 18 mm	www.wago.com/210-115
	Item no.: 210-118 Steel carrier rail; 35 x 15 mm; 2.3 mm thick; 2 m long; unslotted; according to EN 60715	www.wago.com/210-118
	Item no.: 210-196 Aluminum carrier rail; 35 x 8.2 mm; 1.6 mm thick; 2 m long; unslotted; similar to EN 60715; silver-colored	www.wago.com/210-196
	Item no.: 210-197 Steel carrier rail; 35 x 15 mm; 1.5 mm thick; 2 m long; slotted; similar to EN 60715	www.wago.com/210-197
	Item no.: 210-198 Copper carrier rail; 35 x 15 mm; 2.3 mm thick; 2 m long; unslotted; according to EN 60715; copper-colored	www.wago.com/210-198
	Item no.: 210-504 Steel carrier rail; 35 x 7.5 mm; 1 mm thick; 2 m long; slotted; galvanized; according to EN 60715	www.wago.com/210-504
	Item no.: 210-505 Steel carrier rail; 35 x 7.5 mm; 1 mm thick; 2 m long; unslotted; galvanized; according to EN 60715	www.wago.com/210-505
	Item no.: 210-506 Steel carrier rail; 35 x 15 mm; 1.5 mm thick; 2 m long; unslotted; galvanized; similar to EN 60715	www.wago.com/210-506
	Item no.: 210-508 Steel carrier rail; 35 x 15 mm; 1.5 mm thick; 2 m long; slotted; galvanized; similar to EN 60715	www.wago.com/210-508

Subject to changes. Please also observe the further product documentation!

WAGO Kontakttechnik GmbH & Co. KG
Hansastr. 27
32423 Minden
Phone: +49571 887-0 | Fax: +49571 887-169
Email: info.de@wago.com | Web: www.wago.com

Do you have any questions about our products?
We are always happy to take your call at +49 (571) 887-44222.

Downloads

Documentation

Bid Text

280-875 GAEB X81 - Datei	Feb 19, 2019	xml 3.5 kB	Download
280-875 doc - Datei	Mar 2, 2017	doc 25.6 kB	Download

Additional Information

Technical explanations	Apr 3, 2019	pdf 2.1 MB	Download

CAD/CAE-Data

CAE data

EPLAN Data Portal 280-875	URL	Download
WSCAD Universe 280-875	URL	Download

Installation Notes

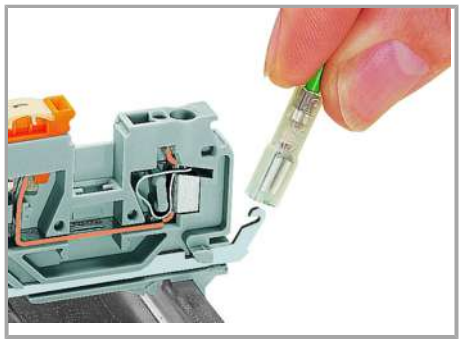

Shield contact via (2.5 x 0.8) mm solder /crimp quick disconnect terminal

Subject to changes. Please also observe the further product documentation!

WAGO Kontakttechnik GmbH & Co. KG
Hansastr. 27
32423 Minden
Phone: +49571 887-0 | Fax: +49571 887-169
Email: info.de@wago.com | Web: www.wago.com

Do you have any questions about our products?
We are always happy to take your call at +49 (571) 887-44222.

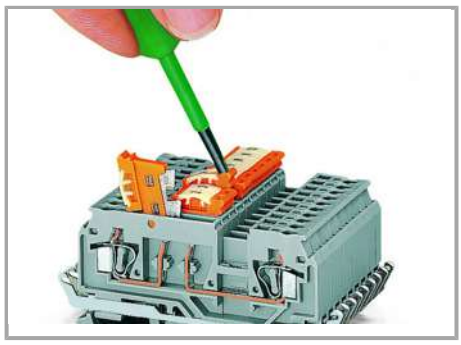

Pivoting a knife disconnect.

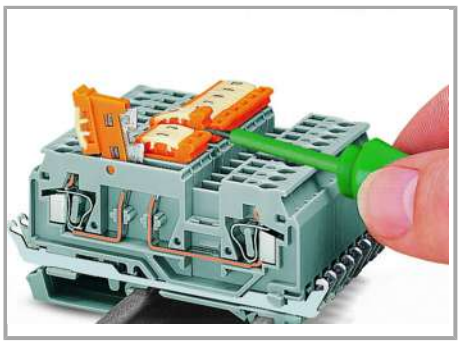

Pivoting knife disconnect clearly indicates circuit state by defined, notched positions “ON” <—> “OFF.”

Testing

Testing with voltage tester.

Marking

Terminal block labeling – via WMB (center position) and Mini-WSB markers (on the sides)

Subject to changes. Please also observe the further product documentation!

WAGO Kontakttechnik GmbH & Co. KG
Hansastr. 27
32423 Minden
Phone: +49571 887-0 | Fax: +49571 887-169
Email: info.de@wago.com | Web: www.wago.com

Do you have any questions about our products?
We are always happy to take your call at +49 (571) 887-44222.