Data sheet | Item number: 294-4314

Lighting connector; push-button, external; with angled snap-in ground contact; 4-pole; Lighting side: for solid conductors; Inst. side: for all conductor types; max. 2.5 mm²; Surrounding air temperature: max 85°C (T85); 2,50 mm²; white

www.wago.com/294-4314

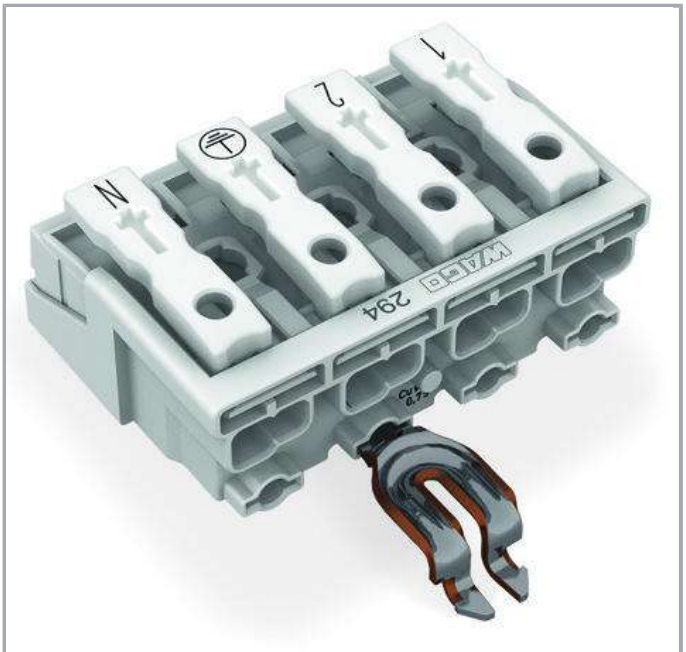

RoHS ✓ Compliant

BOMcheck.net

Color:

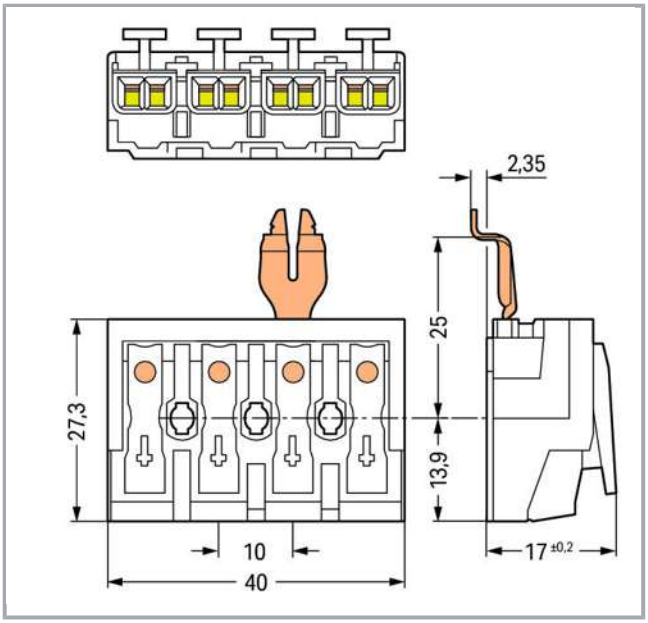

Item description

- External connection of solid, stranded and fine-stranded conductors
- Universal conductor termination (AWG, metric)
- Third contact at bottom
- Strain relief plate can be retrofitted

Data

Electrical data

Subject to changes. Please also observe the further product documentation!

WAGO Kontakttechnik GmbH & Co. KG
Hansastr. 27
32423 Minden
Phone: +49571 887-0 | Fax: +49571 887-169
Email: info.de@wago.com | Web: www.wago.com

Do you have any questions about our products?
We are always happy to take your call at +49 (571) 887-44222.

Ratings per IEC/EN 60664-1

Ratings per	IEC/EN 60998-1
Ratings note	Connection points
Rated voltage (II / 2)	500 V
Rated impulse voltage (II / 2)	4 kV
Rated current	24 A
Ratings according to 2	IEC/EN 60998-2-2
Ratings note 2	Connection points
Rated voltage (II / 2) 2	500 V
Rated impulse voltage (II / 2) 2	4 kV
Rated current (2)	24 A
Rated current (3)	16 A
Legend (ratings)	(II / 2) ≙ Overvoltage category II / Pollution degree 2

Connection data

Connection type (1)	External 1
Connection technology	Push-in CAGE CLAMP®
Number of connection points (connection type)	2
Actuation type	Operating tool Push-button
Connectable conductor materials	Copper
Solid conductor	0,5 … 2,5 mm² / 18 … 12 AWG
Solid conductor, push-in termination	0,5 … 2,5 mm² / 18 … 12 AWG
Stranded conductor	0,5 … 2,5 mm² / 18 … 14 AWG
Fine-stranded conductor	0,5 … 2,5 mm² / 18 … 14 AWG
Fine-stranded conductor with ferrule with plastic collar	0,5 … 1,5 mm² / 18 … 16 AWG
Fine-stranded conductor with ferrule without plastic collar	0,5 … 1,5 mm² / 18 … 16 AWG
Fine-stranded conductor with ferrule, push-in termination, from	0,5 mm² / 18 AWG
Strip length	8 … 9 mm / 0.31 … 0.35 inch
No. of poles	4
Connection type (2)	Internal 2
Connection technology 2	PUSH WIRE®
Number of connection points	1
Solid conductor (2)	0,5 … 2,5 mm² / 18 … 14 AWG
Fine-stranded conductor with insulated ferrule (2)	0,5 … 1 mm² / 18 … 16 AWG
Fine-stranded conductor with uninsulated ferrule (2)	0,5 … 1,5 mm² / 18 … 14 AWG

Subject to changes. Please also observe the further product documentation!

WAGO Kontakttechnik GmbH & Co. KG
Hansastr. 27
32423 Minden
Phone: +49571 887-0 | Fax: +49571 887-169
Email: info.de@wago.com | Web: www.wago.com

Do you have any questions about our products?
We are always happy to take your call at +49 (571) 887-44222.

Strip length (2)	8 … 9 mm / 0.31 … 0.35 inch
Connection type (3)	Internal 3
Number of connection points	1
Solid conductor (3)	0,5 … 1,5 mm² / 18 … 16 AWG
Fine-stranded conductor with insulated ferrule (3)	0,5 … 0,75 mm² / 18 AWG0.5 … 0.75mm² / 18 AWG
Fine-stranded conductor with uninsulated ferrule (3)	0,5 … 1 mm² / 18 AWG
Connection type (4)	Internal 4
Number of connection points	1
Solid conductor (4)	0,5 … 0,75 mm² / 18 AWG
Total number of connection points	20
Total number of potentials	4
Number of connection types	4
Type of wiring	Side-entry wiring
Ground function	with angled snap-in ground contact

Geometrical Data

Pin spacing	10 mm / 0.394 inch
Width	40 mm / 1.575 inch
Height from the surface	17 mm / 0.669 inch
Depth	27,3 mm / 1.075 inch

Mechanical data

Marking	1-2-PE-N

Material Data

Color	white
Material group	III a
Insulating material	Polycarbonate (PC)
Flammability class per UL94	V0
Clamping spring material	Chrome nickel spring steel (CrNi)
Contact material	Electrolytic copper (E_{Cu})
Contact plating	tin-plated
Fire load	0.24 MJ
Weight	13.1 g

Subject to changes. Please also observe the further product documentation!

WAGO Kontakttechnik GmbH & Co. KG
Hansastr. 27
32423 Minden
Phone: +49571 887-0 | Fax: +49571 887-169
Email: info.de@wago.com | Web: www.wago.com

Do you have any questions about our products?
We are always happy to take your call at +49 (571) 887-44222.

Environmental Requirements

Temperature stability	120 °C
T-Kennzeichung	T85

Commercial data

Product Group	8 (Misc. Chassis Mount Blocks)
Packaging type	bag
Country of origin	PL
GTIN	4050821097952
Customs Tariff No.	85369010000

Approvals / Certificates

Country specific Approvals

Logo	Approval	Additional Approval Text	Certificate name
	ENEC 05 DEKRA Certification B.V.	EN 60998	2128791.01

Counterpart

Compatible products

Strain relief plate

	Item no.: 294-364 Strain relief plate; for 294 Series; for multicore cables; 3- to 5-pole; with secured clamp; white	www.wago.com/294-364
	Item no.: 294-370 Strain relief; for 294 Series; with snap-in mounting feet; white	www.wago.com/294-370
	Item no.: 294-375 Strain relief; for 294 Series; without snap-in mounting feet; white	www.wago.com/294-375
	Item no.: 294-384 Strain relief plate; for 294 Series; for single strands; 3- to 5-pole; with secured clamp; white	www.wago.com/294-384

tools

Subject to changes. Please also observe the further product documentation!

WAGO Kontakttechnik GmbH & Co. KG
Hansastr. 27
32423 Minden
Phone: +49571 887-0 | Fax: +49571 887-169
Email: info.de@wago.com | Web: www.wago.com

Do you have any questions about our products?
We are always happy to take your call at +49 (571) 887-44222.

	Item no.: 206-294 Disconnection tool	www.wago.com/206-294
	Item no.: 294-199 Operating tool; for pressing the snap-in mounting feet into the mounting plate; For fitting ground contacts; for 294 Series	www.wago.com/294-199

Downloads

Documentation

Bid Text

294-4314 doc - Datei	Jun 13, 2017	doc 28.7 kB	Download
294-4314 GAEB X81 - Datei	Feb 19, 2019	xml 5.7 kB	Download

Additional Information

Technical explanations	Apr 3, 2019	pdf 2.1 MB	Download

CAD/CAE-Data

CAD data

2D/3D Models 294-4314	URL	Download

CAE data

WSCAD Universe 294-4314	URL	Download

Installation Notes

Installation

Subject to changes. Please also observe the further product documentation!

WAGO Kontakttechnik GmbH & Co. KG
Hansastr. 27
32423 Minden
Phone: +49571 887-0 | Fax: +49571 887-169
Email: info.de@wago.com | Web: www.wago.com

Do you have any questions about our products?
We are always happy to take your call at +49 (571) 887-44222.

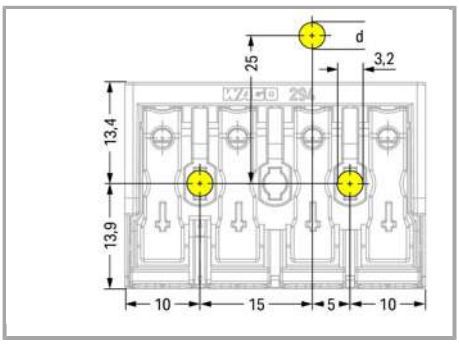

4-pole –with snap-in ground contact, d = 4.9 mm

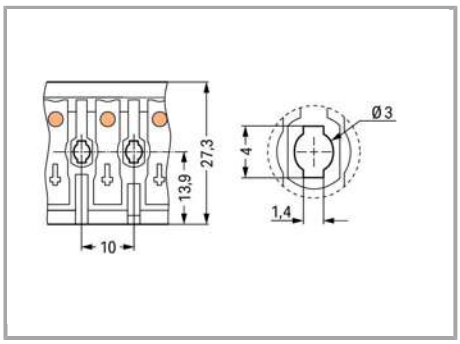

Mounting hole for screw

Notice:

The maximum thread diameter for self-tapping screws is 3 mm.

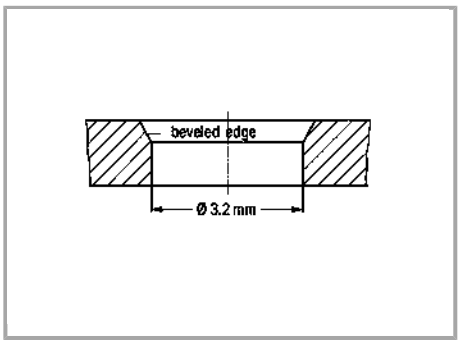

Hole for screw mount

Notice:

The maximum thread diameter for self-tapping screws is 3 mm.

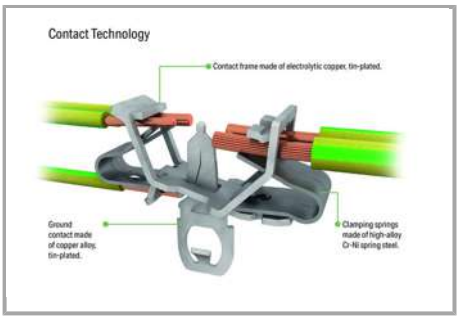

EUROPE
1 x 0.5 ... 2.5 mm² "s"
1 x 0.5 ... 1.5 mm² "s"
1 x 0.5 ... 0.75 mm² "s"
AMERICA
1 x AWG 18 ... 14 "s"
1 x AWG 18 ... 16 "s"
1 x AWG 18 "s"
JAPAN
1 x 0.8 ... 1.6 mm diam. "s"
1 x 0.8 ... 1 mm diam. "s"
1 x 0.8 mm diam. "s"

Internal connection:

PUSH WIRE® for internal wiring with solid conductors

EUROPE
2 x 0.5 ... 2.5 mm² "s, str, f-str"
AMERICA
2 x AWG 18 ... 12 "s"
2 x AWG 18 ... 14 "s, f-str"
JAPAN
2 x 0.8 ... 2 mm diam. "s"
2 x 0.5 ... 2 mm² "str, f-str"

External connection:

Push-in CAGE CLAMP® for field-wiring with all conductor types

Subject to changes. Please also observe the further product documentation!

WAGO Kontakttechnik GmbH & Co. KG
Hansastr. 27
32423 Minden
Phone: +49571 887-0 | Fax: +49571 887-169
Email: info.de@wago.com | Web: www.wago.com

Do you have any questions about our products?
We are always happy to take your call at +49 (571) 887-44222.

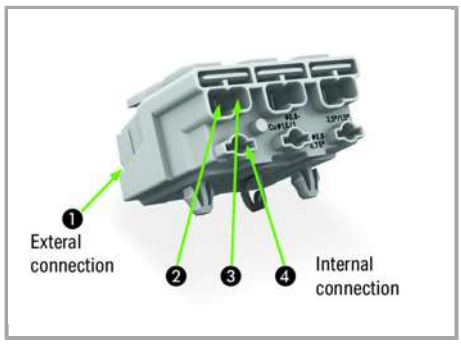

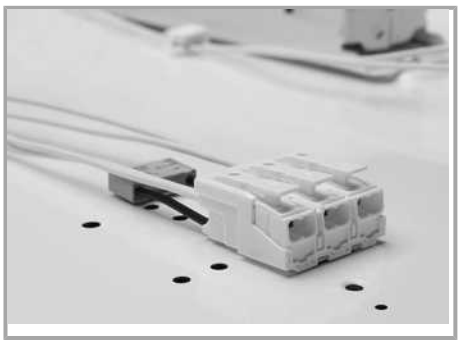

Terminating five conductors per pole – solid and fine-stranded.

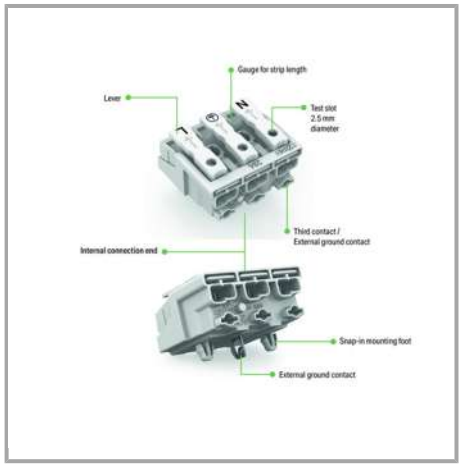

WAGO Kontakttechnik GmbH & Co. KG
Hansastr. 27
32423 Minden
Phone: +49571 887-0 | Fax: +49571 887-169
Email: info.de@wago.com | Web: www.wago.com

Do you have any questions about our products?
We are always happy to take your call at +49 (571) 887-44222.