Data sheet | Item number: 704-5204

Interface module for system wiring; Pluggable connector per DIN 41651; Male connector; 20-pole; 16-channel relay output; 1 changeover contact; Double-deck PCB terminal blocks; for DC loads; in mounting carrier

www.wago.com/704-5204

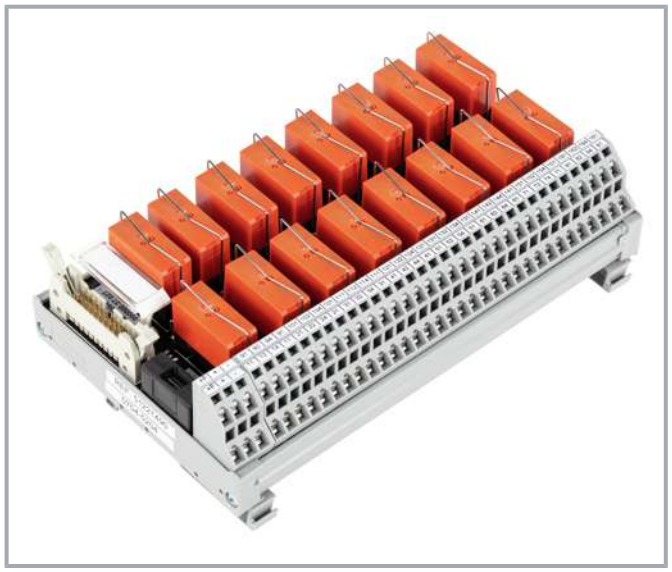

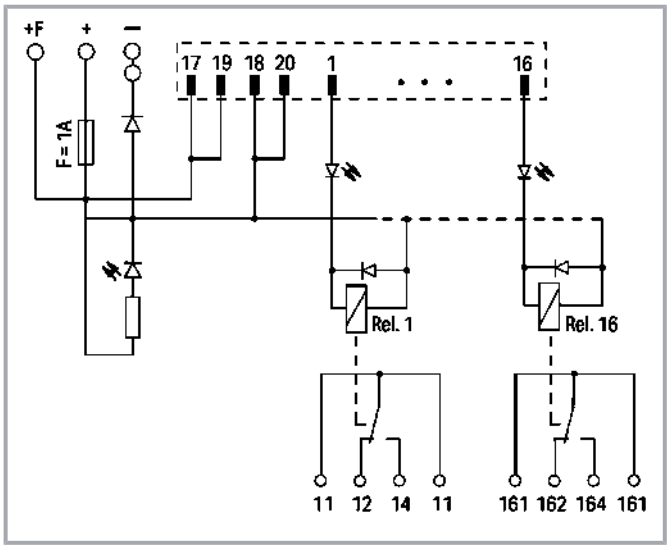

Item description

Note:

Independent of the relay used, the maximum continuous current is 5A per channel.

Data

Electrical data

Inputs/outputs	16-channel relay output
Nominal operating voltage	DC 24 V
Operating voltage range	±10 %
Number of changeover contacts	1
Limiting continuous current	5 A
Making capacity	2 ms 16 A
Switching voltage (max.)	AC 250 V; DC 150 V
Switching power (resistive) (max.)	AC 1250 VA; DC 50 W
Mechanical life	30 x 10^6 switching operations
Status indicator	Green LED (channel) Yellow LED (power supply)

Subject to changes. Please also observe the further product documentation!

WAGO Corporation
Germantown, WI 53022
Phone: 1-800-DIN-RAIL (346-7245) | Fax: (262) 255-6222
Email: info.us@wago.com | Web: www.wago.us

Do you have any questions about our products?
We are always happy to take your call at +49 (571) 887-44222.

Internal fuse	Supply: 1 A; Relay output: -
WAGO Basic Relay	788-156
Specialty functions	for DC loads

Safety and protection

Rated voltage	50 V
Rated surge voltage	0.8 kV
Pollution degree	2
Dielectric strength, control/load circuit (AC, 1 min)	2.5 kVrms
Dielectric strength, load/load circuit (AC, 1 min)	1 kVrms

Connection data

Compatible PLC Modules	Siemens S7-300 Siemens S7-400 Siemens S7-1500 GE Fanuc 9030 GE Fanuc RX3i Schneider Modicon TM3 Schneider TSX Schneider Twido Schneider Modicon M340 Schneider Modicon Quantum Rockwell Compact Logix Rockwell Control Logix WAGO I/O System 753 WAGO I/O System 750 Omron CJ1W
Compatible PLC I/O Card Types	6ES7 313-5BE01-0AB0 6ES7 313-5BG04-0AB0 6ES7 313-6BE01-0AB0 6ES7 313-6BF03-0AB0 6ES7 313-6CE01-0AB0 6ES7 313-6CF03-0AB0 6ES7 314-6BF01-0AB0 6ES7 314-6BG03-0AB0 6ES7 314-6CF01-0AB0 6ES7 314-6CG03-0AB0 6ES7 322-1BH01-0AA0 6ES7 322-1BH10-0AA0 6ES7 322-1BH80-0AA0 6ES7 322-1BL00-0AA0 6ES7 322-1BP00-0AA0 6ES7 322-1EH01-0AA0 6ES7 322-8BH01/8BH10-0AB0

Subject to changes. Please also observe the further product documentation!

WAGO Corporation
Germantown, WI 53022
Phone: 1-800-DIN-RAIL (346-7245) | Fax: (262) 255-6222
Email: info.us@wago.com | Web: www.wago.us

Do you have any questions about our products?
We are always happy to take your call at +49 (571) 887-44222.

6ES7 323-1BL00-0AA0
6ES7 422-1BL00-0AA0
6ES7 511-1CK00-0AB0
6ES7 512-1CK00-0AB0
6ES7 522-1BH00-0AB0
6ES7 522-1BH01-0AB0
6ES7 522-1BH10-0AA0
6ES7 522-1BL00-0AB0
6ES7 522-1BL01-0AB0
6ES7 522-1BL10-0AA0
6ES7 523-1BL00-0AA0
IC693 MDL740
IC693 MDL742
IC693 MDL753
IC694 MDL753
TM3 DQ16T(G)
TM3 DQ16TK
TM3 DQ32TK
TSX DSZ 32T2
TSX DMZ 28DT
TSX DMZ 28DTK
TSX DMZ 64DTK
TSX DSY 16T2
TSX DSY 32T2K
TSX DSY 64T2K
TSX DMY 28FK
TSX DMY 28RFK
TM2 DDO 16TK
TM2 DDO 32TK
BMX DDO 1602
BMX DDO 3202K
BMX DDO 6402K
BMX DDM 3202K
140 DDO 353 00
140 DDO 353 01
140 DDO 364 00
140 DVO 853 00
1769 - OB16
1769 - OB16P
1769 - OB32
1769 - OB32T
1756 - OB16E
1756 - OB32
753-530 (x2)
750-1500
CJ1W-OD212
CJ1W-OD232

Subject to changes. Please also observe the further product documentation!

WAGO Corporation
Germantown, WI 53022
Phone: 1-800-DIN-RAIL (346-7245) | Fax: (262) 255-6222
Email: info.us@wago.com | Web: www.wago.us

Do you have any questions about our products?
We are always happy to take your call at +49 (571) 887-44222.

	CJ1W-OD262 CJ1W-MD232
Connection type (1)	System
Pole number 1	20
Pluggable connectors	DIN 41651 male connector
Mating direction	vertical
Conductor diameter	28 … 12 AWG
Connection type 2	Field
Pole number 2	64
Design 2	PCB terminal blocks (double-deck)
WAGO Connector 2	WAGO 736 Series
Solid conductor 2	0.08 … 2.5 mm² / 28 … 12 AWG
Fine-stranded conductor 2	0.08 … 2.5 mm² / 28 … 12 AWG
Conductor diameter 2	28 … 12 AWG
Strip length 2	5 … 6 mm / 0.2 … 0.24 inch
Connection type (3)	Supply
Pole number 3	4
Design 3	PCB terminal blocks (double-deck)
WAGO Connector 3	WAGO 736 Series
Solid conductor 3	0.08 … 2.5 mm² / 28 … 12 AWG
Fine-stranded conductor (3)	0.08 … 2.5 mm² / 28 … 12 AWG
Strip length 3	5 … 6 mm / 0.2 … 0.24 inch

Physical data

Width	180 mm / 7.087 inch
Height	105 mm / 4.134 inch
Depth from upper edge of DIN-rail	50 mm / 1.969 inch

Mechanical data

Mounting type	DIN-35 rail

Material data

Contact material (relay)	AgNi 90/10
Fire load	12.72 MJ
Weight	419.5 g

Subject to changes. Please also observe the further product documentation!

WAGO Corporation
Germantown, WI 53022
Phone: 1-800-DIN-RAIL (346-7245) | Fax: (262) 255-6222
Email: info.us@wago.com | Web: www.wago.us

Do you have any questions about our products?
We are always happy to take your call at +49 (571) 887-44222.

Environmental requirements

Surrounding air temperature (operation)	-25 … 50 °C
Surrounding air temperature (storage)	-40 … 70 °C
Relative humidity	85% (non-condensing)

Commercial data

PU (SPU)	1 Stück
Packaging type	box
Country of origin	DE
GTIN	4055144025453
Customs tariff number	8538901000

Downloads

Documentation

System Description

WAGO System Wiring, Selection Guide This guide will help you select the appropriate interface modules and system cables for the controller you are usng.	pdf 545.9 kB	Download

Environmental Product Compliance

Compliance Search

Environmental Product Compliance 704-5204 Interface module for system wiring; Pluggable connector per DIN 41651; Male connector; 20-pole; 16-channel relay output; 1 changeover contact; Double-deck PCB terminal blocks; for DC loads; in mounting carrier	URL	Download

Installation Notes

WAGO Corporation
Germantown, WI 53022
Phone: 1-800-DIN-RAIL (346-7245) | Fax: (262) 255-6222
Email: info.us@wago.com | Web: www.wago.us

Do you have any questions about our products?
We are always happy to take your call at +49 (571) 887-44222.