Data sheet | Item number: 713-1116/035-000

1-conductor female connector, 2-row; CAGE CLAMP®; 1.5 mm²; Pin spacing 3.5 mm; 32-pole; 100% protected against mismating; Strain relief plate; 1,50 mm²; black

www.wago.com/713-1116_035-000

Picture differs from the item.

Subject to changes. Please also observe the further product documentation!

WAGO Corporation
Germantown, WI 53022
Phone: 1-800-DIN-RAIL (346-7245) | Fax: (262) 255-6222
Email: info.us@wago.com | Web: www.wago.us

Do you have any questions about our products?
We are always happy to take your call at +49 (571) 887-44222.

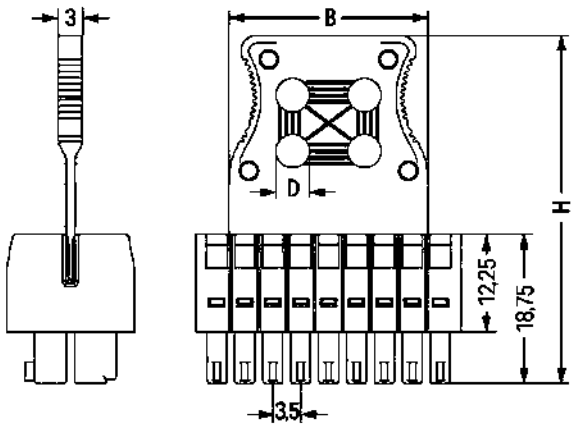

Pole No.	B	H	D
6 ... 8	11	38,7	3
10 ... 12	18	43,7	4,2
14 ... 20	25	43,7	4,2
22 ... 28	39	48,7	4,2
30 ... 36	53	54,2	4,9

Dimensions in mm

L = [(pole no./2) – 1] x pin spacing + 5.2 mm

Coding finger (red circle)

Item description

- Universal connection for all conductor types
- Unique, compact, double-row connector system for conductor cross-sections up to 1.5 mm^2
- High-density, wire-to-board connections in very confined spaces
- Centered strain relief plate anchors conductors, while acting as convenient connection and disconnection handle. It also provides easy access to operating slots – even when wired.
- Coding fingers provide 100% protection against mismating

Subject to changes. Please also observe the further product documentation!

WAGO Corporation
Germantown, WI 53022
Phone: 1-800-DIN-RAIL (346-7245) | Fax: (262) 255-6222
Email: info.us@wago.com | Web: www.wago.us

Do you have any questions about our products?
We are always happy to take your call at +49 (571) 887-44222.

Data
Connection data

Connection 1

Connection technology	CAGE CLAMP®
Actuation type	Operating tool
Solid conductor	0.08 … 1.5 mm² / 28 … 16 AWG
Fine-stranded conductor	0.08 … 1.5 mm² / 28 … 16 AWG
Fine-stranded conductor; with insulated ferrule	0.25 … 1 mm²
Fine-stranded conductor; with uninsulated ferrule	0.25 … 1 mm²
Strip length	6 … 7 mm / 0.24 … 0.28 inch
Number of poles	32
Conductor entry direction to mating direction	0 °

Notes

Safety information 1	The *MCS – MULTI CONNECTION SYSTEM* includes connectors without breaking capacity in accordance with DIN EN 61984. When used as intended, these connectors must not be connected /disconnected when live or under load.When used as intended, these connectors must not be connected/disconnected when live or under load. The circuit design should ensure header pins, which can be touched, are not live when unmated.
Variants:	Other pole numbers Gold-plated or partially gold-plated contact surfaces Other versions (or variants) can be requested from WAGO Sales or configured at https://configurator.wago.com/.

Approvals / Certificates

Country specific Approvals

Logo	Approval	Additional Approval Text	Certificate name
	CCA DEKRA Certification B.V.	EN 61984	2169947.01
	CCA DEKRA Certification B.V.	IEC 61984	NL-30980

UL-Approvals

Subject to changes. Please also observe the further product documentation!

WAGO Corporation
Germantown, WI 53022
Phone: 1-800-DIN-RAIL (346-7245) | Fax: (262) 255-6222
Email: info.us@wago.com | Web: www.wago.us

Do you have any questions about our products?
We are always happy to take your call at +49 (571) 887-44222.

Logo	Approval	Additional Approval Text	Certificate name
	UR Underwriters Laboratories Inc.	UL 1059	E45172

Counterpart

	Item no.713-1436 THT male header, 2-row; 0.8 x 0.8 mm solder pin; angled; 100% protected against mismating; Pin spacing 3.5 mm; 32-pole; black	www.wago.com/713-1436
	Item no.713-1416 THT male header, 2-row; 0.8 x 0.8 mm solder pin; straight; 100% protected against mismating; Pin spacing 3.5 mm; 32-pole; black	www.wago.com/713-1416

Optional accessories

Stickers for operating instructions

Other

	Item no.: 210-493 Stickers for operating instructions	www.wago.com/210-493

Downloads

Documentation

Additional Information

Technical Section Technical explanations	2019 Apr 3	pdf 2.0 MB	Download

Installation Notes

Conductor termination

WAGO Corporation
Germantown, WI 53022
Phone: 1-800-DIN-RAIL (346-7245) | Fax: (262) 255-6222
Email: info.us@wago.com | Web: www.wago.us

Do you have any questions about our products?
We are always happy to take your call at +49 (571) 887-44222.

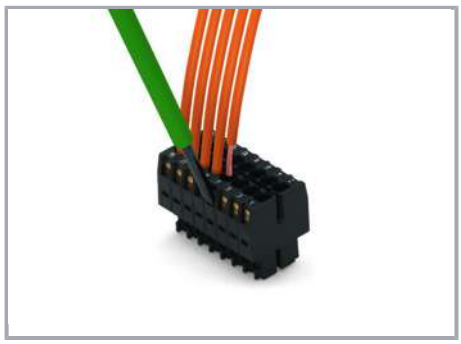

Inserting a conductor via (2.5 x 0.4) mm screwdriver.

Locking system

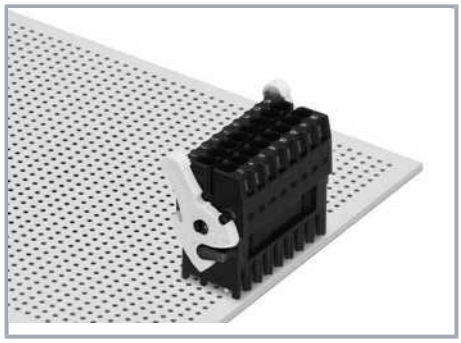

Lever as a lock – when closed, female connector is locked.

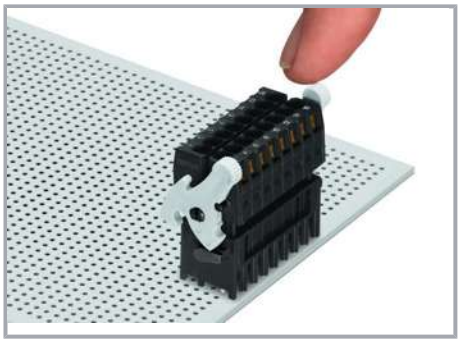

Lever as a disconnection aid – when opened, female connector is disconnected. Rotating the lever lifts the female connector out of the male header.

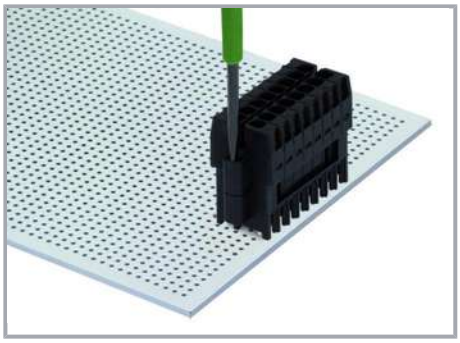

Screw interlock can only be disconnected using a tool.

Coding

Coding a female connector by removing coding finger(s).

Subject to changes. Please also observe the further product documentation!

WAGO Corporation
Germantown, WI 53022
Phone: 1-800-DIN-RAIL (346-7245) | Fax: (262) 255-6222
Email: info.us@wago.com | Web: www.wago.us

Do you have any questions about our products?
We are always happy to take your call at +49 (571) 887-44222.

Installation

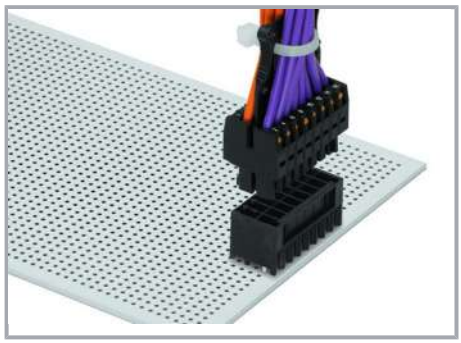

Centered strain relief plate anchors conductors for easy disconnection.

Product family

MCS MINI HD
Show all products from the family

Subject to changes. Please also observe the further product documentation!

WAGO Corporation
Germantown, WI 53022
Phone: 1-800-DIN-RAIL (346-7245) | Fax: (262) 255-6222
Email: info.us@wago.com | Web: www.wago.us

Do you have any questions about our products?
We are always happy to take your call at +49 (571) 887-44222.