**Data sheet | Item number: 713-1409/117-000**

THR male header, 2-row; 0.8 x 0.8 mm solder pin; straight; 100% protected against mismating; Threaded flange; Pin spacing 3.5 mm; 2 x 9-pole; black

www.wago.com/713-1409_117-000

RoHS ✓ Compliant

BOMcheck.net

Color:

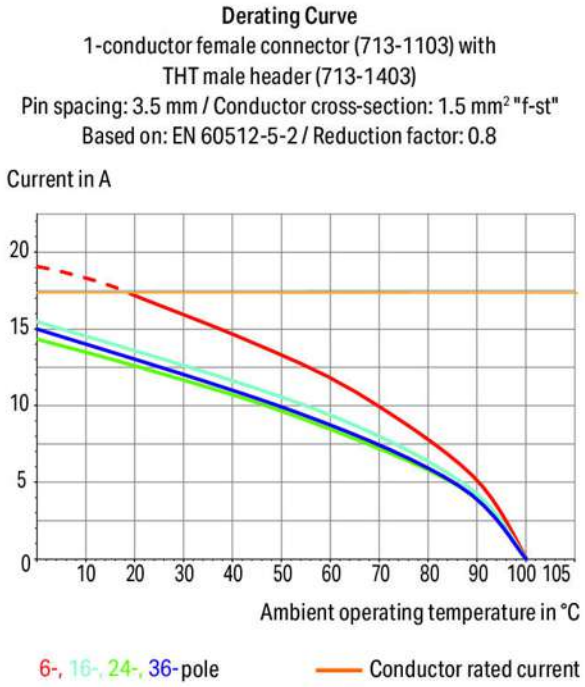


Subject to changes. Please also observe the further product documentation!

WAGO Kontakttechnik GmbH & Co. KG
Hansastr. 27
32423 Minden
Phone: +49571 887-0 | Fax: +49571 887-169
Email: info.de@wago.com | Web: www.wago.com

Do you have any questions about our products?
We are always happy to take your call at +49 (571) 887-44222.

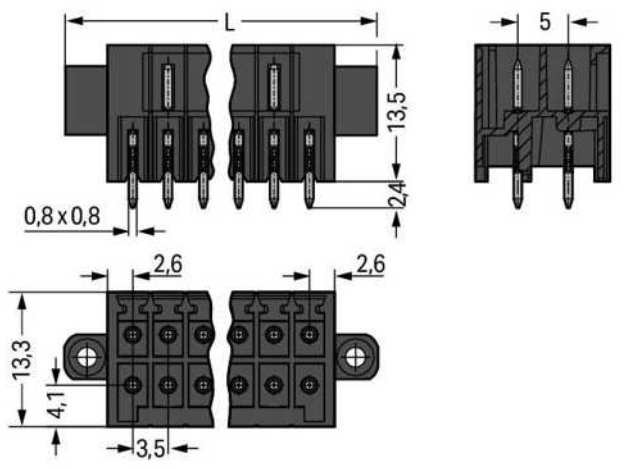


L = [(pole no./2) – 1] x pin spacing + 13.6 mm

## Item description

- THR male headers for reflow soldering in SMT applications
- Available in tape-and-reel packaging for automated pick-and-place PCB assembly
- Separated pin slots prevent damage and make the headers touch-proof when unplugged
- 100% protected against mismating
- Coding pins available

**Safety information 1:**
The *MULTI CONNECTION SYSTEM (MCS)* is designed without breaking capacity for compliance with DIN EN 61984. When used as intended, MCS Connectors shall not be connected/disconnected when live or under load. The circuit design should ensure header pins, which can be touched, are not live when unmated.

## Data
## Electrical data

### Ratings per IEC/EN 60664-1

| Ratings per | IEC/EN 60664-1 |
|---|---|
| Rated voltage (III / 3) | 80 V |
| Rated impulse voltage (III / 3) | 2.5 kV |
| Rated voltage (III / 2) | 160 V |
| Rated impulse voltage (III / 2) | 2.5 kV |
| Rated voltage (II / 2) | 250 V |

Subject to changes. Please also observe the further product documentation!

WAGO Kontakttechnik GmbH & Co. KG
Hansastr. 27
32423 Minden
Phone: +49571 887-0 | Fax: +49571 887-169
Email: info.de@wago.com | Web: www.wago.com

Do you have any questions about our products?
We are always happy to take your call at +49 (571) 887-44222.

| | |
|---|---|
| Rated impulse voltage (II / 2) | 2.5 kV |
| Rated current | 10 A |
| Legend (ratings) | (III / 2) ≙ Overvoltage category III / Pollution degree 2 |

## Approvals per UL 1059

| | |
|---|---|
| Rated voltage UL (Use Group B) | 150 V |
| Rated current UL (Use Group B) | 10 A |
| Rated voltage UL (Use Group C) | 50 V |
| Rated current UL (Use Group C) | 10 A |
| Approvals per | UL 1059 |

## Approvals per CSA

| | |
|---|---|
| Rated voltage CSA (Use Group B) | 150 V |
| Rated current CSA (Use Group B) | 12 A |

## Connection data

| | |
|---|---|
| No. of poles | 18 |
| Total number of potentials | 18 |
| Number of connection types | 1 |
| Number of levels | 2 |

## Geometrical Data

| | |
|---|---|
| Pin spacing | 3.5 mm / 0.138 inch |
| Width | 41.6 mm / 1.638 inch |
| Height | 15.9 mm / 0.626 inch |
| Height from the surface | 13.5 mm / 0.531 inch |
| Depth | 13.3 mm / 0.524 inch |
| Solder pin length | 2.4 mm |
| Solder pin dimensions | 0.8 x 0.8 mm |
| Plated through-hole diameter (THR) | 1.3 $^{(+0.1)}$ mm |

## Plug connection

| | |
|---|---|
| Contact type (pluggable connector) | Male connector/plug |
| Connector connection type | for PCBs |
| Mismating protection | Yes |
| Mating direction to the PCB | 90 ° |

Subject to changes. Please also observe the further product documentation!

WAGO Kontakttechnik GmbH & Co. KG
Hansastr. 27
32423 Minden
Phone: +49571 887-0 | Fax: +49571 887-169
Email: info.de@wago.com | Web: www.wago.com

Do you have any questions about our products?
We are always happy to take your call at +49 (571) 887-44222.

| | |
|---|---|
| Locking of plug-in connection | Threaded flange |

## PCB contact

| | |
|---|---|
| PCB contact | THR |
| Solder pin arrangement | over the entire male connector, in line |
| Number of solder pins per potential | 1 |

## Material Data

| | |
|---|---|
| Color | black |
| Material group | I |
| Insulating material | Polyphthalamide (PPA GF) |
| Flammability class per UL94 | V0 |
| Contact material | Electrolytic copper ($E_{Cu}$) |
| Contact plating | tin-plated |
| Fire load | 0.105 MJ |
| Weight | 5.2 g |

## Environmental Requirements

| | |
|---|---|
| Limit temperature range | -60 … +100 °C |

## Commercial data

| | |
|---|---|
| Product Group | 3 (Multi Conn. System) |
| Packaging type | BOX |
| Country of origin | PL |
| GTIN | 4050821156468 |
| Customs Tariff No. | 85366990990 |

## Approvals / Certificates

### UL-Approvals

| Logo | Approval | Additional Approval Text | Certificate name |
|---|---|---|---|
| | **UL**<br>Underwriters Laboratories Inc. | UL 1059 | 20190122-E45172 |



WAGO Kontakttechnik GmbH & Co. KG
Hansastr. 27
32423 Minden
Phone: +49571 887-0 | Fax: +49571 887-169
Email: info.de@wago.com | Web: www.wago.com

Do you have any questions about our products?
We are always happy to take your call at +49 (571) 887-44222.

## Counterpart

**Item no.713-1109/107-000**
1-conductor female plug; 100% protected against mismating; Screw flange; 1.5 mm²; Pin spacing 3.5 mm; 18-pole; 1,50 mm²; black

www.wago.com/713-1109/107-000

## Compatible products

**Coding**

**Item no.: 714-101**
Coding key; orange

www.wago.com/714-101

## Downloads

## Documentation

**Additional Information**

| | | | |
|---|---|---|---|
| Technical explanations | Apr 3, 2019 | pdf<br>3.6 MB | Download |

## CAD/CAE-Data

**CAD data**

| | | |
|---|---|---|
| 2D/3D Models 713-1409/117-000 | URL | Download |

**PCB Design**

| | | |
|---|---|---|
| Symbol and Footprint 713-1409/117-000 | URL | Download |

CAx data for your PCB design, consisting of "schematic symbols and PCB footprints", allow easy integration of the WAGO component into your development environment.

**Supported formats:**

- Accel EDA 14 & 15
- Altium 6 to current version
- Cadence Allegro
- DesignSpark
- Eagle Libraries
- KiCad
- Mentor Graphics BoardStation
- Mentor Graphics Design Architect
- Mentor Graphics Design Expedition 99 and 2000

Subject to changes. Please also observe the further product documentation!

WAGO Kontakttechnik GmbH & Co. KG
Hansastr. 27
32423 Minden
Phone: +49571 887-0 | Fax: +49571 887-169
Email: info.de@wago.com | Web: www.wago.com

Do you have any questions about our products?
We are always happy to take your call at +49 (571) 887-44222.

- OrCAD 9.X PCB and Capture
- PADS PowerPCB 3, 3.5, 4.X, and 5.X
- PADS PowerPCB and PowerLogic 3.0
- PCAD 2000, 2001, 2002, 2004, and 2006
- Pulsonix 8.5 or newer
- STL
- 3D STEP
- TARGET 3001!
- View Logic ViewDraw
- Quadcept
- Zuken CadStar 3 and 4
- Zuken CR-5000 and CR-8000

PCB Component Libraries (EDA), PCB CAD Library Ultra Librarian

## Installation Notes

**Coding**

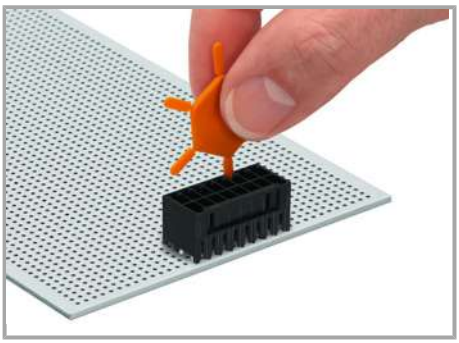

Coding a male header by inserting a coding pin.

## Product family

**MCS MINI HD**
Show all products from the family

Subject to changes. Please also observe the further product documentation!

WAGO Kontakttechnik GmbH & Co. KG
Hansastr. 27
32423 Minden
Phone: +49571 887-0 | Fax: +49571 887-169
Email: info.de@wago.com | Web: www.wago.com

Do you have any questions about our products?
We are always happy to take your call at +49 (571) 887-44222.