Data sheet | Item number: 713-1415/117-000

THR male header, 2-row; 0.8 x 0.8 mm solder pin; straight; 100% protected against mismating; Threaded flange; Pin spacing 3.5 mm; 2 x 15-pole; black

www.wago.com/713-1415_117-000

RoHS ✓ Compliant

BOMcheck.net

Color:

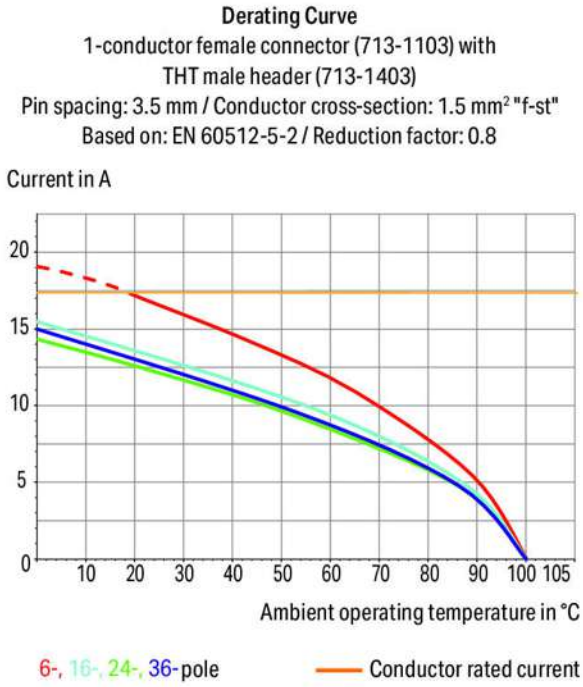

Subject to changes. Please also observe the further product documentation!

WAGO Kontakttechnik GmbH & Co. KG
Hansastr. 27
32423 Minden
Phone: +49571 887-0 | Fax: +49571 887-169
Email: info.de@wago.com | Web: www.wago.com

Do you have any questions about our products?
We are always happy to take your call at +49 (571) 887-44222.

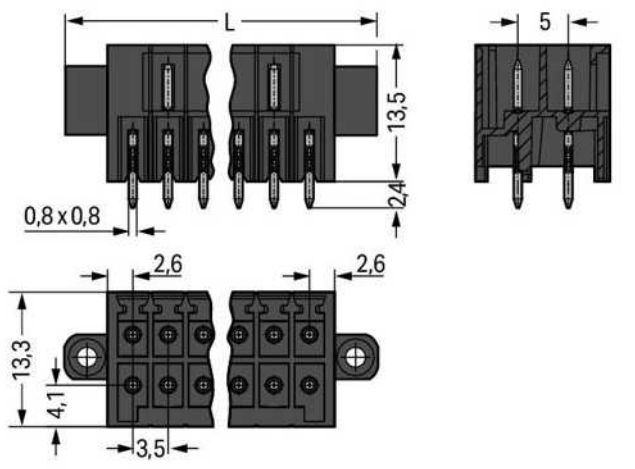

L = [(pole no./2) – 1] x pin spacing + 13.6 mm

Item description

- THR male headers for reflow soldering in SMT applications
- Available in tape-and-reel packaging for automated pick-and-place PCB assembly
- Separated pin slots prevent damage and make the headers touch-proof when unplugged
- 100% protected against mismating
- Coding pins available

Safety information 1:
The *MULTI CONNECTION SYSTEM (MCS)* is designed without breaking capacity for compliance with DIN EN 61984. When used as intended, MCS Connectors shall not be connected/disconnected when live or under load. The circuit design should ensure header pins, which can be touched, are not live when unmated.

Data
Electrical data

Ratings per IEC/EN 60664-1

Ratings per	IEC/EN 60664-1
Rated voltage (III / 3)	80 V
Rated impulse voltage (III / 3)	2.5 kV
Rated voltage (III / 2)	160 V
Rated impulse voltage (III / 2)	2.5 kV
Rated voltage (II / 2)	250 V

Subject to changes. Please also observe the further product documentation!

WAGO Kontakttechnik GmbH & Co. KG
Hansastr. 27
32423 Minden
Phone: +49571 887-0 | Fax: +49571 887-169
Email: info.de@wago.com | Web: www.wago.com

Do you have any questions about our products?
We are always happy to take your call at +49 (571) 887-44222.

Rated impulse voltage (II / 2)	2.5 kV
Rated current	10 A
Legend (ratings)	(III / 2) ≙ Overvoltage category III / Pollution degree 2

Approvals per UL 1059

Rated voltage UL (Use Group B)	150 V
Rated current UL (Use Group B)	10 A
Rated voltage UL (Use Group C)	50 V
Rated current UL (Use Group C)	10 A
Approvals per	UL 1059

Approvals per CSA

Rated voltage CSA (Use Group B)	150 V
Rated current CSA (Use Group B)	12 A

Connection data

No. of poles	30
Total number of potentials	3
Number of connection types	1
Number of levels	2

Geometrical Data

Pin spacing	3.5 mm / 0.138 inch
Width	62.6 mm / 2.465 inch
Height	15.9 mm / 0.626 inch
Height from the surface	13.5 mm / 0.531 inch
Depth	13.3 mm / 0.524 inch
Solder pin length	2.4 mm
Solder pin dimensions	0.8 x 0.8 mm
Plated through-hole diameter (THR)	1.3 $^{(+0.1)}$ mm

Plug connection

Contact type (pluggable connector)	Male connector/plug
Connector connection type	for PCBs
Mismating protection	Yes
Mating direction to the PCB	90 °

Subject to changes. Please also observe the further product documentation!

WAGO Kontakttechnik GmbH & Co. KG
Hansastr. 27
32423 Minden
Phone: +49571 887-0 | Fax: +49571 887-169
Email: info.de@wago.com | Web: www.wago.com

Do you have any questions about our products?
We are always happy to take your call at +49 (571) 887-44222.

Locking of plug-in connection	Threaded flange

PCB contact

PCB contact	THR
Solder pin arrangement	over the entire male connector, in line
Number of solder pins per potential	1

Material Data

Color	black
Material group	I
Insulating material	Polyphthalamide (PPA GF)
Flammability class per UL94	V0
Contact material	Electrolytic copper (E_{Cu})
Contact plating	tin-plated
Fire load	0.163 MJ
Weight	8.1 g

Environmental Requirements

Limit temperature range	-60 … +100 °C

Commercial data

Product Group	3 (Multi Conn. System)
Packaging type	BOX
Country of origin	PL
GTIN	4050821156529
Customs Tariff No.	85366990990

Approvals / Certificates

UL-Approvals

Logo	Approval	Additional Approval Text	Certificate name
	UL Underwriters Laboratories Inc.	UL 1059	20190122-E45172

WAGO Kontakttechnik GmbH & Co. KG
Hansastr. 27
32423 Minden
Phone: +49571 887-0 | Fax: +49571 887-169
Email: info.de@wago.com | Web: www.wago.com

Do you have any questions about our products?
We are always happy to take your call at +49 (571) 887-44222.

Counterpart

Item no.713-1115/107-000
1-conductor female plug; 100% protected against mismating; Screw flange; 1.5 mm²; Pin spacing 3.5 mm; 30-pole; 1,50 mm²; black

www.wago.com/713-1115/107-000

Compatible products

Coding

Item no.: 714-101
Coding key; orange

www.wago.com/714-101

Downloads

Documentation

Additional Information

Technical explanations	Apr 3, 2019	pdf 3.6 MB	Download

CAD/CAE-Data

CAD data

2D/3D Models 713-1415/117-000	URL	Download

PCB Design

Symbol and Footprint 713-1415/117-000	URL	Download

CAx data for your PCB design, consisting of "schematic symbols and PCB footprints", allow easy integration of the WAGO component into your development environment.

Supported formats:

- Accel EDA 14 & 15
- Altium 6 to current version
- Cadence Allegro
- DesignSpark
- Eagle Libraries
- KiCad
- Mentor Graphics BoardStation
- Mentor Graphics Design Architect
- Mentor Graphics Design Expedition 99 and 2000

Subject to changes. Please also observe the further product documentation!

WAGO Kontakttechnik GmbH & Co. KG
Hansastr. 27
32423 Minden
Phone: +49571 887-0 | Fax: +49571 887-169
Email: info.de@wago.com | Web: www.wago.com

Do you have any questions about our products?
We are always happy to take your call at +49 (571) 887-44222.

- OrCAD 9.X PCB and Capture
- PADS PowerPCB 3, 3.5, 4.X, and 5.X
- PADS PowerPCB and PowerLogic 3.0
- PCAD 2000, 2001, 2002, 2004, and 2006
- Pulsonix 8.5 or newer
- STL
- 3D STEP
- TARGET 3001!
- View Logic ViewDraw
- Quadcept
- Zuken CadStar 3 and 4
- Zuken CR-5000 and CR-8000

PCB Component Libraries (EDA), PCB CAD Library Ultra Librarian

Installation Notes

Coding

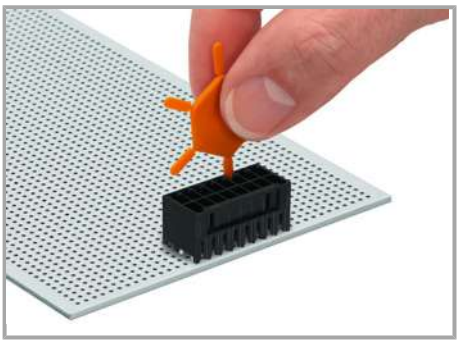

Coding a male header by inserting a coding pin.

Product family

MCS MINI HD
Show all products from the family

Subject to changes. Please also observe the further product documentation!

WAGO Kontakttechnik GmbH & Co. KG
Hansastr. 27
32423 Minden
Phone: +49571 887-0 | Fax: +49571 887-169
Email: info.de@wago.com | Web: www.wago.com

Do you have any questions about our products?
We are always happy to take your call at +49 (571) 887-44222.