1-conductor female plug; angled; 100% protected against mismating; Snap-in mounting feet; 2.5 mm²; Pin spacing 5 mm; 11-pole; 2,50 mm²; light gray

www.wago.com/721-311_008-000

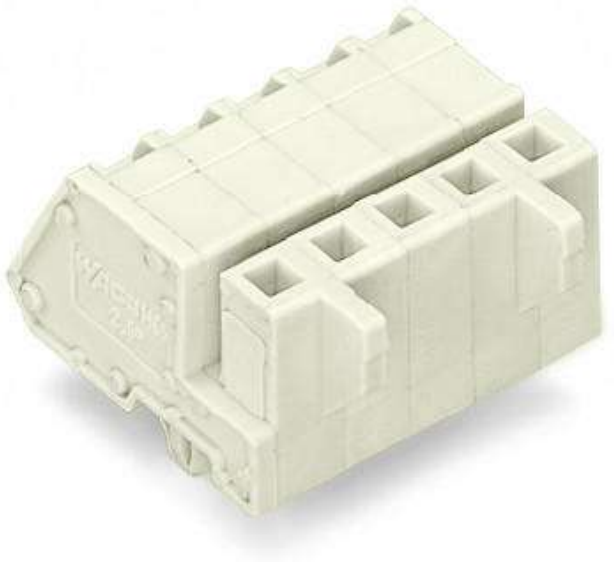

RoHS ✓ Compliant

BOMcheck.net

Color:

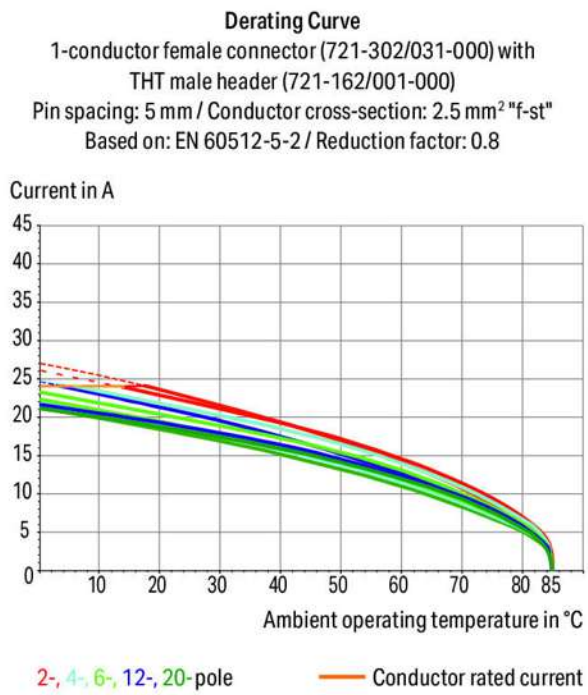

Subject to changes. Please also observe the further product documentation!

WAGO Kontakttechnik GmbH & Co. KG
Hansastr. 27
32423 Minden
Phone: +49571 887-0 | Fax: +49571 887-169
Email: info.de@wago.com | Web: www.wago.com

Do you have any questions about our products?
We are always happy to take your call at +49 (571) 887-44222.

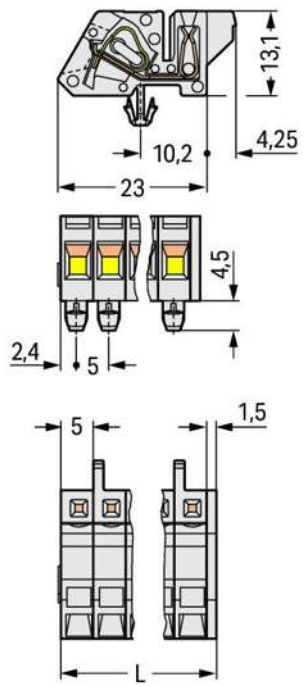

L = (pole no. x pin spacing) + 1.5 mm

Item description

- Universal connection for all conductor types
- Versions available with snap-in mounting feet or flanges for panel or through-panel mounting
- Mounting adapter allows versions with snap-in mounting feet to be DIN-rail mounted
- Easy conductor termination, even when halves are mated
- 100 % protected against mismating

Safety information 1:
The *MULTI CONNECTION SYSTEM (MCS)* is designed without breaking capacity for compliance with DIN EN 61984. When used as intended, MCS Connectors shall not be connected/disconnected when live or under load. The circuit design should ensure header pins, which can be touched, are not live when unmated.

Data
Electrical data

WAGO Kontakttechnik GmbH & Co. KG
Hansastr. 27
32423 Minden
Phone: +49571 887-0 | Fax: +49571 887-169
Email: info.de@wago.com | Web: www.wago.com

Do you have any questions about our products?
We are always happy to take your call at +49 (571) 887-44222.

Ratings per IEC/EN 60664-1

Ratings per	IEC/EN 60664-1
Rated voltage (III / 3)	320 V
Rated impulse voltage (III / 3)	4 kV
Rated voltage (III / 2)	320 V
Rated impulse voltage (III / 2)	4 kV
Rated voltage (II / 2)	630 V
Rated impulse voltage (II / 2)	4 kV
Rated current	12 A
Legend (ratings)	(III / 2) ≙ Overvoltage category III / Pollution degree 2

Approvals per UL 1059

Rated voltage UL (Use Group B)	300 V
Rated current UL (Use Group B)	15 A
Rated voltage UL (Use Group D)	300 V
Rated current UL (Use Group D)	10 A
Approvals per	UL 1059

Approvals per UL 1977

Rated voltage per UL 1977 (factory wiring only)	600 V
Rated current per UL 1977 (factory wiring only)	15 A

Approvals per CSA

Rated voltage CSA (Use Group B)	300 V
Rated current CSA (Use Group B)	15 A
Rated voltage CSA (Use Group D)	300 V
Rated current CSA (Use Group D)	10 A

Connection data

Connection technology	CAGE CLAMP®
Actuation type	Operating tool
Solid conductor	0.08 … 2.5 mm² / 28 … 12 AWG
Fine-stranded conductor	0.08 … 2.5 mm² / 28 … 12 AWG
Fine-stranded conductor with ferrule with plastic collar	0.25 … 1.5 mm²
Fine-stranded conductor with ferrule without plastic collar	0.25 … 2.5 mm²

Subject to changes. Please also observe the further product documentation!

WAGO Kontakttechnik GmbH & Co. KG
Hansastr. 27
32423 Minden
Phone: +49571 887-0 | Fax: +49571 887-169
Email: info.de@wago.com | Web: www.wago.com

Do you have any questions about our products?
We are always happy to take your call at +49 (571) 887-44222.

Strip length	7 … 8 mm / 0.28 … 0.31 inch
No. of poles	11
Total number of connection points	11
Total number of potentials	11
Number of connection types	1
Number of levels	1
Conductor entry direction to mating direction	90 °

Geometrical Data

Pin spacing	5 mm / 0.197 inch
Width	56.5 mm / 2.224 inch
Height	17.6 mm / 0.693 inch
Height from the surface	13.1 mm / 0.516 inch
Depth	27.25 mm / 1.073 inch

Mechanical data

Gehäuseblechstärke	0.6 … 1.2 mm / 0.024 … 0.047 inch
Design	angled; mountable
Mounting type	Snap-in mounting foot
Type of mounting	Feed-through mounting Panel mounting

Plug connection

Contact type (pluggable connector)	Female connector/socket
Connector connection type	for conductors
Mismating protection	Yes

Material Data

Color	light gray
Material group	I
Insulating material	Polyamide 66 (PA 66)
Flammability class per UL94	V0
Clamping spring material	Chrome nickel spring steel (CrNi)
Contact material	Copper alloy
Contact plating	tin-plated
Fire load	0.327 MJ
Weight	16.5 g

Subject to changes. Please also observe the further product documentation!

WAGO Kontakttechnik GmbH & Co. KG
Hansastr. 27
32423 Minden
Phone: +49571 887-0 | Fax: +49571 887-169
Email: info.de@wago.com | Web: www.wago.com

Do you have any questions about our products?
We are always happy to take your call at +49 (571) 887-44222.

Environmental Requirements

Limit temperature range	-60 … +85 °C

Commercial data

Product Group	3 (Multi Conn. System)
Packaging type	BOX
Country of origin	DE
GTIN	4017332760874
Customs Tariff No.	85366990990

Approvals / Certificates

Country specific Approvals

Logo	Approval	Additional Approval Text	Certificate name
	CB DEKRA Certification B.V.	IEC 61984	NL-39756
	CSA DEKRA Certification B.V.	C22.2	1466354
	KEMA/KEUR DEKRA Certification B.V.	EN 61984	2190761.01

Ship Approvals

Logo	Approval	Additional Approval Text	Certificate name
	ABS American Bureau of Shipping	-	19-HG1869876-PDA
	DNV GL Det Norske Veritas, Germanischer Lloyd	-	TAE000016Z

UL-Approvals

Logo	Approval	Additional Approval Text	Certificate name

Subject to changes. Please also observe the further product documentation!

WAGO Kontakttechnik GmbH & Co. KG
Hansastr. 27
32423 Minden
Phone: +49571 887-0 | Fax: +49571 887-169
Email: info.de@wago.com | Web: www.wago.com

Do you have any questions about our products?
We are always happy to take your call at +49 (571) 887-44222.

UL Underwriters Laboratories Inc.	UL 1059	20190731-E45172
UR UL International Germany GmbH	UL 1977	E45171

Counterpart

Item no.721-611
1-conductor male connector; 100% protected against mismating; 2.5 mm²; Pin spacing 5 mm; 11-pole; 2,50 mm²; light gray
www.wago.com/721-611

Item no.721-141/001-000
THT male header; 1.0 x 1.0 mm solder pin; straight; 100% protected against mismating; Pin spacing 5 mm; 11-pole; light gray
www.wago.com/721-141/001-000

Compatible products

assembling

Item no.: 209-120
Mounting foot; can be snapped on terminal blocks with snap-in mounting foot; for mounting on relay-modules; 6.4 mm wide; gray
www.wago.com/209-120

ferrule

Item no.: 216-106
Ferrule; Sleeve for 2.5 mm² / AWG 14; uninsulated; electro-tin plated
www.wago.com/216-106

Item no.: 216-107
Ferrule; Sleeve for 4 mm² / AWG 12; uninsulated; electro-tin plated
www.wago.com/216-107

Item no.: 216-108
Ferrule; Sleeve for 6 mm² / AWG 10; uninsulated; electro-tin plated
www.wago.com/216-108

Item no.: 216-109
Ferrule; Sleeve for 10 mm² / AWG 8; uninsulated; electro-tin plated
www.wago.com/216-109

Subject to changes. Please also observe the further product documentation!

WAGO Kontakttechnik GmbH & Co. KG
Hansastr. 27
32423 Minden
Phone: +49571 887-0 | Fax: +49571 887-169
Email: info.de@wago.com | Web: www.wago.com

Do you have any questions about our products?
We are always happy to take your call at +49 (571) 887-44222.

	Item no.: 216-110 Ferrule; Sleeve for 16 mm² / AWG 6; uninsulated; electro-tin plated	www.wago.com/216-110
	Item no.: 216-121 Ferrule; Sleeve for 0.5 mm² / AWG 22; uninsulated; electro-tin plated	www.wago.com/216-121
	Item no.: 216-122 Ferrule; Sleeve for 0.75 mm² / AWG 20; uninsulated; electro-tin plated	www.wago.com/216-122
	Item no.: 216-123 Ferrule; Sleeve for 1 mm² / AWG 18; uninsulated; electro-tin plated	www.wago.com/216-123
	Item no.: 216-124 Ferrule; Sleeve for 1.5 mm² / AWG 16; uninsulated; electro-tin plated	www.wago.com/216-124
	Item no.: 216-131 Ferrule; Sleeve for 0.25 mm² / AWG 24; uninsulated; electro-tin plated	www.wago.com/216-131
	Item no.: 216-132 Ferrule; Sleeve for 0.34 mm² / AWG 24; uninsulated; electro-tin plated	www.wago.com/216-132
	Item no.: 216-141 Ferrule; Sleeve for 0.5 mm² / 20 AWG; uninsulated; electro-tin plated; electrolytic copper; gastight crimped; acc. to DIN 46228, Part 1/08.92	www.wago.com/216-141
	Item no.: 216-142 Ferrule; Sleeve for 0.75 mm² / 18 AWG; uninsulated; electro-tin plated; electrolytic copper; gastight crimped; acc. to DIN 46228, Part 1/08.92	www.wago.com/216-142
	Item no.: 216-143 Ferrule; Sleeve for 1 mm² / AWG 18; uninsulated; electro-tin plated; electrolytic copper; gastight crimped; acc. to DIN 46228, Part 1/08.92	www.wago.com/216-143
	Item no.: 216-144 Ferrule; Sleeve for 1.5 mm² / AWG 16; uninsulated; electro-tin plated; electrolytic copper; gastight crimped; acc. to DIN 46228, Part 1/08.92	www.wago.com/216-144
	Item no.: 216-151 Ferrule; Sleeve for 0.25 mm² / AWG 24; uninsulated; electro-tin plated	www.wago.com/216-151
	Item no.: 216-152 Ferrule; Sleeve for 0.34 mm² / AWG 24; uninsulated; electro-tin plated	www.wago.com/216-152
	Item no.: 216-207 Ferrule; Sleeve for 4 mm² / AWG 12; insulated; electro-tin plated; gray	www.wago.com/216-207
	Item no.: 216-208 Ferrule; Sleeve for 6 mm² / AWG 10; insulated; electro-tin plated; electrolytic copper; gastight crimped; acc. to DIN 46228, Part 4/09.90; yellow	www.wago.com/216-208
	Item no.: 216-209 Ferrule; Sleeve for 10 mm² / AWG 8; insulated; electro-tin plated; red	www.wago.com/216-209
	Item no.: 216-210 Ferrule; Sleeve for 16 mm² / AWG 6; insulated; electro-tin plated; electrolytic copper; gastight crimped; acc. to DIN 46228, Part 4/09.90; blue	www.wago.com/216-210

Subject to changes. Please also observe the further product documentation!

WAGO Kontakttechnik GmbH & Co. KG
Hansastr. 27
32423 Minden
Phone: +49571 887-0 | Fax: +49571 887-169
Email: info.de@wago.com | Web: www.wago.com

Do you have any questions about our products?
We are always happy to take your call at +49 (571) 887-44222.

	Item no.: 216-221 Ferrule; Sleeve for 0.5 mm² / 20 AWG; insulated; electro-tin plated; white	www.wago.com/216-221
	Item no.: 216-222 Ferrule; Sleeve for 0.75 mm² / 18 AWG; insulated; electro-tin plated; gray	www.wago.com/216-222
	Item no.: 216-223 Ferrule; Sleeve for 1 mm² / AWG 18; insulated; electro-tin plated; red	www.wago.com/216-223
	Item no.: 216-224 Ferrule; Sleeve for 1.5 mm² / AWG 16; insulated; electro-tin plated; black	www.wago.com/216-224
	Item no.: 216-241 Ferrule; Sleeve for 0.5 mm² / 20 AWG; insulated; electro-tin plated; electrolytic copper; gastight crimped; acc. to DIN 46228, Part 4/09.90; white	www.wago.com/216-241
	Item no.: 216-242 Ferrule; Sleeve for 0.75 mm² / 18 AWG; insulated; electro-tin plated; electrolytic copper; gastight crimped; acc. to DIN 46228, Part 4/09.90; gray	www.wago.com/216-242
	Item no.: 216-243 Ferrule; Sleeve for 1 mm² / AWG 18; insulated; electro-tin plated; electrolytic copper; gastight crimped; acc. to DIN 46228, Part 4/09.90; red	www.wago.com/216-243
	Item no.: 216-244 Ferrule; Sleeve for 1.5 mm² / AWG 16; insulated; electro-tin plated; electrolytic copper; gastight crimped; acc. to DIN 46228, Part 4/09.90; black	www.wago.com/216-244
	Item no.: 216-246 Ferrule; Sleeve for 2.5 mm² / AWG 14; insulated; electro-tin plated; electrolytic copper; gastight crimped; acc. to DIN 46228, Part 4/09.90; blue	www.wago.com/216-246
	Item no.: 216-262 Ferrule; Sleeve for 0.75 mm² / 18 AWG; insulated; electro-tin plated; electrolytic copper; gastight crimped; acc. to DIN 46228, Part 4/09.90; gray	www.wago.com/216-262
	Item no.: 216-263 Ferrule; Sleeve for 1 mm² / AWG 18; insulated; electro-tin plated; electrolytic copper; gastight crimped; acc. to DIN 46228, Part 4/09.90; red	www.wago.com/216-263
	Item no.: 216-264 Ferrule; Sleeve for 1.5 mm² / AWG 16; insulated; electro-tin plated; electrolytic copper; gastight crimped; acc. to DIN 46228, Part 4/09.90; black	www.wago.com/216-264
	Item no.: 216-266 Ferrule; Sleeve for 2.5 mm² / AWG 14; insulated; electro-tin plated; electrolytic copper; gastight crimped; acc. to DIN 46228, Part 4/09.90; blue	www.wago.com/216-266
	Item no.: 216-267 Ferrule; Sleeve for 4 mm² / AWG 12; insulated; electro-tin plated; electrolytic copper; gastight crimped; acc. to DIN 46228, Part 4/09.90; gray	www.wago.com/216-267
	Item no.: 216-284 Ferrule; Sleeve for 1.5 mm² / AWG 16; insulated; electro-tin plated; electrolytic copper; gastight crimped; acc. to DIN 46228, Part 4/09.90; black	www.wago.com/216-284
	Item no.: 216-286 Ferrule; Sleeve for 2.5 mm² / AWG 14; insulated; electro-tin plated; electrolytic copper; gastight crimped; acc. to DIN 46228, Part 4/09.90; blue	www.wago.com/216-286
	Item no.: 216-287	

Subject to changes. Please also observe the further product documentation!

WAGO Kontakttechnik GmbH & Co. KG
Hansastr. 27
32423 Minden
Phone: +49571 887-0 | Fax: +49571 887-169
Email: info.de@wago.com | Web: www.wago.com

Do you have any questions about our products?
We are always happy to take your call at +49 (571) 887-44222.

	Ferrule; Sleeve for 4 mm² / AWG 12; insulated; electro-tin plated; electrolytic copper; gastight crimped; acc. to DIN 46228, Part 4/09.90; gray	www.wago.com/216-287
	Item no.: 216-288 Ferrule; Sleeve for 6 mm² / AWG 10; insulated; electro-tin plated; electrolytic copper; gastight crimped; acc. to DIN 46228, Part 4/09.90; yellow	www.wago.com/216-288
	Item no.: 216-289 Ferrule; Sleeve for 10 mm² / AWG 8; insulated; electro-tin plated; electrolytic copper; gastight crimped; acc. to DIN 46228, Part 4/09.90; red	www.wago.com/216-289
	Item no.: 216-321 Ferrule; Sleeve for 0.25 mm² / AWG 24; insulated; electro-tin plated; yellow	www.wago.com/216-321
	Item no.: 216-322 Ferrule; Sleeve for 0.34 mm² / 22 AWG; insulated; electro-tin plated; green	www.wago.com/216-322
Marking accessories		
	Item no.: 210-331/500-103 Marking strips; as a DIN A4 sheet; MARKED; 1-12 (300x); Height of marker strip: 2.3 mm/0.091 in; Strip length 182 mm; Horizontal marking; Self-adhesive; white	www.wago.com/210-331/500-103
	Item no.: 210-331/500-104 Marking strips; as a DIN A4 sheet; MARKED; 13-24 (300x); Height of marker strip: 2.3 mm/0.091 in; Strip length 182 mm; Horizontal marking; Self-adhesive; white	www.wago.com/210-331/500-104
	Item no.: 210-332/500-202 Marking strips; as a DIN A4 sheet; MARKED; 1-16 (160x); Height of marker strip: 3 mm; Strip length 182 mm; Horizontal marking; Self-adhesive; white	www.wago.com/210-332/500-202
	Item no.: 210-332/500-204 Marking strips; as a DIN A4 sheet; MARKED; 17-32 (160x); Height of marker strip: 3 mm; Strip length 182 mm; Horizontal marking; Self-adhesive; white	www.wago.com/210-332/500-204
	Item no.: 210-332/500-205 Marking strips; as a DIN A4 sheet; MARKED; 1-32 (80x); Height of marker strip: 3 mm; Strip length 182 mm; Horizontal marking; Self-adhesive; white	www.wago.com/210-332/500-205
	Item no.: 210-332/500-206 Marking strips; as a DIN A4 sheet; MARKED; 33-48 (160x); Height of marker strip: 3 mm; Strip length 182 mm; Horizontal marking; Self-adhesive; white	www.wago.com/210-332/500-206
	Item no.: 210-833 Marking strips; on reel; 6 mm wide; plain; Self-adhesive; white	www.wago.com/210-833
	Item no.: 210-834 Marking strips; on reel; 5 mm wide; plain; Self-adhesive; white	www.wago.com/210-834
Jumper		
	Item no.: 231-902 Comb-style jumper bar; for 5 mm and 5.08 mm pin spacing; reduces conductor size to 1.5 mm; gray	www.wago.com/231-902
	Item no.: 231-903 Comb-style jumper bar; 3-way; suitable for 231 Series female connectors; with 5 mm pin spacing; insulated; gray	www.wago.com/231-903

Subject to changes. Please also observe the further product documentation!

WAGO Kontakttechnik GmbH & Co. KG
Hansastr. 27
32423 Minden
Phone: +49571 887-0 | Fax: +49571 887-169
Email: info.de@wago.com | Web: www.wago.com

Do you have any questions about our products?
We are always happy to take your call at +49 (571) 887-44222.

	Item no.: 231-905 Comb-style jumper bar; 5-way; suitable for 231 Series female connectors; with 5 mm pin spacing; insulated; gray	www.wago.com/231-905
	Item no.: 231-907 Comb-style jumper bar; 7-way; suitable for 231 Series female connectors; with 5 mm pin spacing; insulated; gray	www.wago.com/231-907
	Item no.: 231-910 Comb-style jumper bar; 10-way; suitable for 231 Series female connectors; with 5 mm pin spacing; insulated; gray	www.wago.com/231-910
Strain relief plate		
	Item no.: 232-610 Strain relief housing; gray	www.wago.com/232-610
General accessories		
	Item no.: 231-668 Lockout caps; for covering unused clamping units; gray	www.wago.com/231-668
check		
	Item no.: 210-136 Test plug; 2 mm Ø; with 500 mm cable; red	www.wago.com/210-136
	Item no.: 210-137 Test plug; 2.3 mm Ø; with 500 mm cable; yellow	www.wago.com/210-137
	Item no.: 231-661 Test plugs for female connectors; for 5 mm and 5.08 mm pin spacing; 2,50 mm²; light gray	www.wago.com/231-661
tools		
	Item no.: 231-131 Push-button; loose	www.wago.com/231-131
	Item no.: 231-291 Operating tool; loose; red	www.wago.com/231-291

Downloads

Documentation

Additional Information

Technical explanations	Apr 3, 2019	pdf 3.6 MB	Download

CAD/CAE-Data

CAD data

2D/3D Models 721-311/008-000	URL	Download

Subject to changes. Please also observe the further product documentation!

WAGO Kontakttechnik GmbH & Co. KG
Hansastr. 27
32423 Minden
Phone: +49571 887-0 | Fax: +49571 887-169
Email: info.de@wago.com | Web: www.wago.com

Do you have any questions about our products?
We are always happy to take your call at +49 (571) 887-44222.

Installation Notes

Application

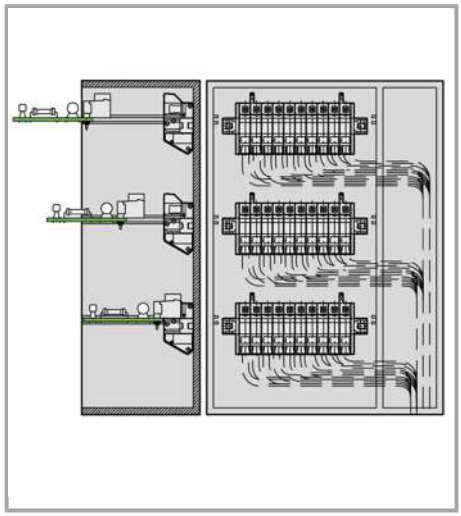

Multilevel arrangement in a distributed electronic housing

Application

Angled female plug – a male header with straight solder pins is used for horizontal PCB mounting in narrow housings.

Product family

MCS MIDI
Show all products from the family

Subject to changes. Please also observe the further product documentation!

WAGO Kontakttechnik GmbH & Co. KG
Hansastr. 27
32423 Minden
Phone: +49571 887-0 | Fax: +49571 887-169
Email: info.de@wago.com | Web: www.wago.com

Do you have any questions about our products?
We are always happy to take your call at +49 (571) 887-44222.