Data sheet | Item number: 727-219

4-level terminal block for matrix patching; for 35 x 7.5 mounting rail; 1,50 mm²; gray

www.wago.com/727-219

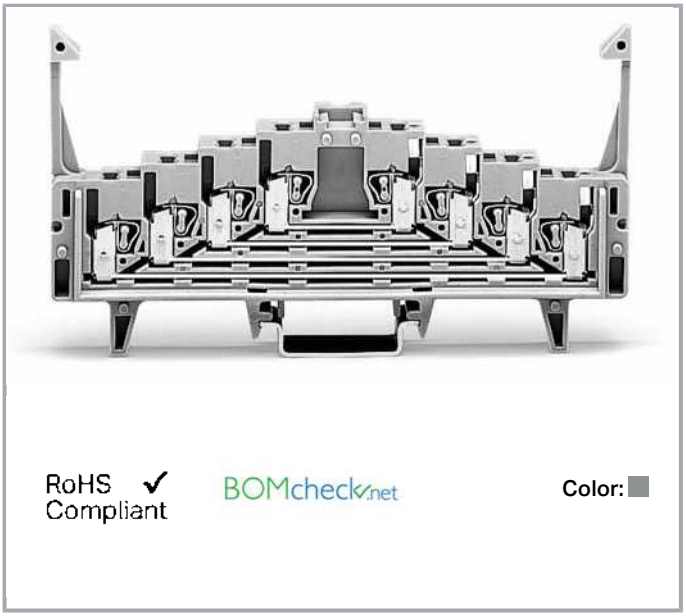

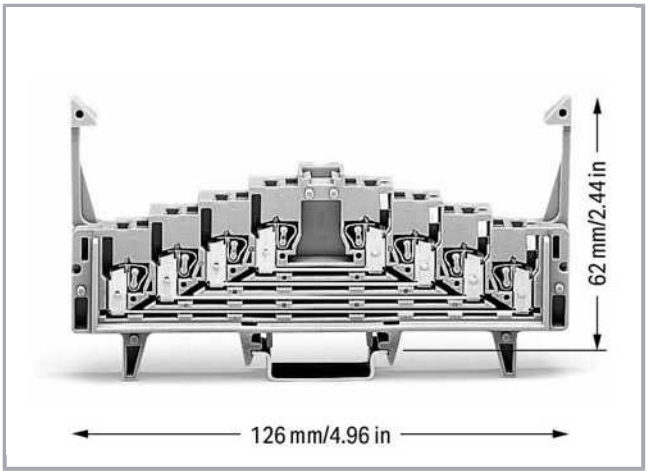

Data

Electrical data

Ratings per IEC/EN 60664-1

Rated voltage (III / 3)	250 V
Rated impulse voltage (III / 3)	4 kV
Rated current	12 A
Legend (ratings)	(III / 3) ≙ Overvoltage category III / Pollution degree 3

Connection data

Connection technology	CAGE CLAMP®
Actuation type	Operating tool
Connectable conductor materials	Copper
Solid conductor	0.08 … 1.5 mm² / 28 … 16 AWG
Fine-stranded conductor	0.08 … 1.5 mm² / 28 … 16 AWG
Strip length	8 … 10 mm / 0.31 … 0.39 inch
Total number of connection points	16

Subject to changes. Please also observe the further product documentation!

WAGO Kontakttechnik GmbH & Co. KG
Hansastr. 27
32423 Minden
Phone: +49571 887-0 | Fax: +49571 887-169
Email: info.de@wago.com | Web: www.wago.com

Do you have any questions about our products?
We are always happy to take your call at +49 (571) 887-44222.

Total number of potentials	4
Number of levels	4
Type of wiring	Front-entry wiring

Geometrical Data

Width	7.62 mm / 0.3 inch
Height from upper-edge of DIN-35 rail	62 mm / 2.441 inch
Depth	126 mm / 4.961 inch

Mechanical data

Design	horizontal
Type of mounting	DIN-35 rail
Marking	plain
Marking level	Center marking

Material Data

Color	gray
Insulating material	Polyamide 66 (PA 66)
Fire load	0.576 MJ
Weight	33.1 g

Commercial data

Packaging type	BOX
Country of origin	DE
GTIN	4045454188498
Customs Tariff No.	85369010000

Approvals / Certificates

Country specific Approvals

Logo	Approval	Additional Approval Text	Certificate name
	CCA DEKRA Certification B.V.	EN 60947	NTR NL 7485
	CSA DEKRA Certification B.V.	C22.2 No. 158	70048845

Subject to changes. Please also observe the further product documentation!

WAGO Kontakttechnik GmbH & Co. KG
Hansastr. 27
32423 Minden
Phone: +49571 887-0 | Fax: +49571 887-169
Email: info.de@wago.com | Web: www.wago.com

Do you have any questions about our products?
We are always happy to take your call at +49 (571) 887-44222.

	KEMA/KEUR DEKRA Certification B.V.	EN 60947	2192101.01

UL-Approvals

Logo	Approval	Additional Approval Text	Certificate name
	UR Underwriters Laboratories Inc.	UL 1059	E45172

Counterpart

Compatible products

check

	Item no.: 210-137 Test plug; 2.3 mm Ø; with 500 mm cable; yellow	www.wago.com/210-137
	Item no.: 210-297 Step-down test plug; from 4mm socket to 2mm plug; red	www.wago.com/210-297

Carrier rail

	Item no.: 210-112 Steel carrier rail; 35 x 7.5 mm; 1 mm thick; 2 m long; slotted; according to EN 60715; "Hole width 25 mm	www.wago.com/210-112
	Item no.: 210-113 Steel carrier rail; 35 x 7.5 mm; 1 mm thick; 2 m long; unslotted; according to EN 60715	www.wago.com/210-113
	Item no.: 210-114 Steel carrier rail; 35 x 15 mm; 1.5 mm thick; 2 m long; unslotted; similar to EN 60715	www.wago.com/210-114

Subject to changes. Please also observe the further product documentation!

WAGO Kontakttechnik GmbH & Co. KG
Hansastr. 27
32423 Minden
Phone: +49571 887-0 | Fax: +49571 887-169
Email: info.de@wago.com | Web: www.wago.com

Do you have any questions about our products?
We are always happy to take your call at +49 (571) 887-44222.

	Item no.: 210-115 Steel carrier rail; 35 x 7.5 mm; 1 mm thick; 2 m long; slotted; according to EN 60715; "Hole width 18 mm	www.wago.com/210-115
	Item no.: 210-118 Steel carrier rail; 35 x 15 mm; 2.3 mm thick; 2 m long; unslotted; according to EN 60715	www.wago.com/210-118
	Item no.: 210-196 Aluminum carrier rail; 35 x 8.2 mm; 1.6 mm thick; 2 m long; unslotted; similar to EN 60715; silver-colored	www.wago.com/210-196
	Item no.: 210-197 Steel carrier rail; 35 x 15 mm; 1.5 mm thick; 2 m long; slotted; similar to EN 60715	www.wago.com/210-197
	Item no.: 210-198 Copper carrier rail; 35 x 15 mm; 2.3 mm thick; 2 m long; unslotted; according to EN 60715; copper-colored	www.wago.com/210-198
	Item no.: 210-504 Steel carrier rail; 35 x 7.5 mm; 1 mm thick; 2 m long; slotted; galvanized; according to EN 60715	www.wago.com/210-504
	Item no.: 210-505 Steel carrier rail; 35 x 7.5 mm; 1 mm thick; 2 m long; unslotted; galvanized; according to EN 60715	www.wago.com/210-505
	Item no.: 210-506 Steel carrier rail; 35 x 15 mm; 1.5 mm thick; 2 m long; unslotted; galvanized; similar to EN 60715	www.wago.com/210-506
	Item no.: 210-508 Steel carrier rail; 35 x 15 mm; 1.5 mm thick; 2 m long; slotted; galvanized; similar to EN 60715	www.wago.com/210-508

Marking accessories

	Item no.: 2009-115 WMB-Inline; for Smart Printer; 1500 pieces on roll; stretchable 5 - 5.2 mm; plain; snap-on type; white	www.wago.com/2009-115
	Item no.: 2009-115/000-002 WMB-Inline; for Smart Printer; 1500 pieces on roll; stretchable 5 - 5.2 mm; plain; snap-on type; yellow	www.wago.com/2009-115/000-002
	Item no.: 2009-115/000-006 WMB-Inline; for Smart Printer; 1500 pieces on roll; stretchable 5 - 5.2 mm; plain; snap-on type; white	www.wago.com/2009-115/000-006
	Item no.: 2009-115/000-007 WMB-Inline; for Smart Printer; 1500 pieces on roll; stretchable 5 - 5.2 mm; plain; snap-on type; gray	www.wago.com/2009-115/000-007
	Item no.: 2009-115/000-012 WMB-Inline; for Smart Printer; 1500 pieces on roll; stretchable 5 - 5.2 mm; plain; snap-on type; white	www.wago.com/2009-115/000-012
	Item no.: 2009-115/000-017 WMB-Inline; for Smart Printer; 1500 pieces on roll; stretchable 5 - 5.2 mm; plain; snap-on type; white	www.wago.com/2009-115/000-017
	Item no.: 2009-115/000-023 WMB-Inline; for Smart Printer; 1500 pieces on roll; stretchable 5 - 5.2 mm; plain; snap-on type; green	www.wago.com/2009-115/000-023

Subject to changes. Please also observe the further product documentation!

WAGO Kontakttechnik GmbH & Co. KG
Hansastr. 27
32423 Minden
Phone: +49571 887-0 | Fax: +49571 887-169
Email: info.de@wago.com | Web: www.wago.com

Do you have any questions about our products?
We are always happy to take your call at +49 (571) 887-44222.

	Item no.: 2009-115/000-024 WMB-Inline; for Smart Printer; 1500 pieces on roll; stretchable 5 - 5.2 mm; plain; snap-on type; white	www.wago.com/2009-115/000-024
	Item no.: 209-128 Adaptor; gray	www.wago.com/209-128
	Item no.: 793-501 WMB marking card; as card; not stretchable; plain; snap-on type; white	www.wago.com/793-501
	Item no.: 793-501/000-002 WMB marking card; as card; not stretchable; plain; snap-on type; yellow	www.wago.com/793-501/000-002
	Item no.: 793-501/000-005 WMB marking card; as card; not stretchable; plain; snap-on type; red	www.wago.com/793-501/000-005
	Item no.: 793-501/000-006 WMB marking card; as card; not stretchable; plain; snap-on type; blue	www.wago.com/793-501/000-006
	Item no.: 793-501/000-007 WMB marking card; as card; not stretchable; plain; snap-on type; gray	www.wago.com/793-501/000-007
	Item no.: 793-501/000-012 WMB marking card; as card; not stretchable; plain; snap-on type; orange	www.wago.com/793-501/000-012
	Item no.: 793-501/000-017 WMB marking card; as card; not stretchable; plain; snap-on type; light green	www.wago.com/793-501/000-017
	Item no.: 793-501/000-023 WMB marking card; as card; not stretchable; plain; snap-on type; green	www.wago.com/793-501/000-023
	Item no.: 793-501/000-024 WMB marking card; as card; not stretchable; plain; snap-on type; violet	www.wago.com/793-501/000-024
	Item no.: 793-5501 WMB marking card; as card; for terminal block width 5 - 17.5 mm; stretchable 5 - 5.2 mm; plain; snap-on type; white	www.wago.com/793-5501
	Item no.: 793-5501/000-002 WMB marking card; as card; for terminal block width 5 - 17.5 mm; stretchable 5 - 5.2 mm; plain; snap-on type; yellow	www.wago.com/793-5501/000-002
	Item no.: 793-5501/000-005 WMB marking card; as card; for terminal block width 5 - 17.5 mm; stretchable 5 - 5.2 mm; plain; snap-on type; red	www.wago.com/793-5501/000-005

Subject to changes. Please also observe the further product documentation!

WAGO Kontakttechnik GmbH & Co. KG
Hansastr. 27
32423 Minden
Phone: +49571 887-0 | Fax: +49571 887-169
Email: info.de@wago.com | Web: www.wago.com

Do you have any questions about our products?
We are always happy to take your call at +49 (571) 887-44222.

	Item no.: 793-5501/000-006 WMB marking card; as card; for terminal block width 5 - 17.5 mm; stretchable 5 - 5.2 mm; plain; snap-on type; blue	www.wago.com/793-5501/000-006
	Item no.: 793-5501/000-007 WMB marking card; as card; for terminal block width 5 - 17.5 mm; stretchable 5 - 5.2 mm; plain; snap-on type; gray	www.wago.com/793-5501/000-007
	Item no.: 793-5501/000-012 WMB marking card; as card; for terminal block width 5 - 17.5 mm; stretchable 5 - 5.2 mm; plain; snap-on type; orange	www.wago.com/793-5501/000-012
	Item no.: 793-5501/000-017 WMB marking card; as card; for terminal block width 5 - 17.5 mm; stretchable 5 - 5.2 mm; plain; snap-on type; green	www.wago.com/793-5501/000-017
	Item no.: 793-5501/000-023 WMB marking card; as card; for terminal block width 5 - 17.5 mm; stretchable 5 - 5.2 mm; plain; snap-on type; light green	www.wago.com/793-5501/000-023
	Item no.: 793-5501/000-024 WMB marking card; as card; for terminal block width 5 - 17.5 mm; stretchable 5 - 5.2 mm; plain; snap-on type; violet	www.wago.com/793-5501/000-024

Jumper

	Item no.: 709-107 Wire commoning chain; insulated; 32 connections; gray	www.wago.com/709-107

End plate

	Item no.: 727-205 4-level end plate; marking: 0-1-2-3--3-2-1-0; 7.62 mm thick; orange	www.wago.com/727-205
	Item no.: 727-206 4-level end plate; marking: a-b-c-d--d-c-b-a; 7.62 mm thick; orange	www.wago.com/727-206
	Item no.: 727-207 4-level end plate; marking: 3-2-1-0--0-1-2-3; 7.62 mm thick; orange	www.wago.com/727-207
	Item no.: 727-208 4-level end plate; marking: d-c-b-a--a-b-c-d; 7.62 mm thick; orange	www.wago.com/727-208
	Item no.: 727-213 4-level end plate; plain; 7.62 mm thick; gray/gray	www.wago.com/727-213
	Item no.: 727-214 4-level end plate; plain; 7.62 mm thick; blue	www.wago.com/727-214
	Item no.: 727-217 4-level end plate; plain; 7.62 mm thick; orange	www.wago.com/727-217

General accessories

Subject to changes. Please also observe the further product documentation!

WAGO Kontakttechnik GmbH & Co. KG
Hansastr. 27
32423 Minden
Phone: +49571 887-0 | Fax: +49571 887-169
Email: info.de@wago.com | Web: www.wago.com

Do you have any questions about our products?
We are always happy to take your call at +49 (571) 887-44222.

	Item no.: 249-109 Wire harness support; gray	www.wago.com/249-109

tools

	Item no.: 210-647 Operating tool; Blade: 2.5 x 0.4 mm; with a partially insulated shaft	www.wago.com/210-647
	Item no.: 210-719 Operating tool; Blade: 2.5 x 0.4 mm; with a partially insulated shaft	www.wago.com/210-719

ferrule

	Item no.: 216-101 Ferrule; Sleeve for 0.5 mm² / AWG 22; uninsulated; electro-tin plated	www.wago.com/216-101
	Item no.: 216-102 Ferrule; Sleeve for 0.75 mm² / AWG 20; uninsulated; electro-tin plated	www.wago.com/216-102
	Item no.: 216-103 Ferrule; Sleeve for 1 mm² / AWG 18; uninsulated; electro-tin plated	www.wago.com/216-103
	Item no.: 216-104 Ferrule; Sleeve for 1.5 mm² / AWG 16; uninsulated; electro-tin plated	www.wago.com/216-104
	Item no.: 216-121 Ferrule; Sleeve for 0.5 mm² / AWG 22; uninsulated; electro-tin plated	www.wago.com/216-121
	Item no.: 216-122 Ferrule; Sleeve for 0.75 mm² / AWG 20; uninsulated; electro-tin plated	www.wago.com/216-122
	Item no.: 216-123 Ferrule; Sleeve for 1 mm² / AWG 18; uninsulated; electro-tin plated	www.wago.com/216-123
	Item no.: 216-124 Ferrule; Sleeve for 1.5 mm² / AWG 16; uninsulated; electro-tin plated	www.wago.com/216-124
	Item no.: 216-131 Ferrule; Sleeve for 0.25 mm² / AWG 24; uninsulated; electro-tin plated	www.wago.com/216-131
	Item no.: 216-132 Ferrule; Sleeve for 0.34 mm² / AWG 24; uninsulated; electro-tin plated	www.wago.com/216-132
	Item no.: 216-151 Ferrule; Sleeve for 0.25 mm² / AWG 24; uninsulated; electro-tin plated	www.wago.com/216-151
	Item no.: 216-152 Ferrule; Sleeve for 0.34 mm² / AWG 24; uninsulated; electro-tin plated	www.wago.com/216-152
	Item no.: 216-201 Ferrule; Sleeve for 0.5 mm² / 20 AWG; insulated; electro-tin plated; white	www.wago.com/216-201
	Item no.: 216-202 Ferrule; Sleeve for 0.75 mm² / 18 AWG; insulated; electro-tin plated; gray	www.wago.com/216-202

Item no.: 216-203

WAGO Kontakttechnik GmbH & Co. KG
Hansastr. 27
32423 Minden
Phone: +49571 887-0 | Fax: +49571 887-169
Email: info.de@wago.com | Web: www.wago.com

	Ferrule; Sleeve for 1 mm² / AWG 18; insulated; electro-tin plated; red	www.wago.com/216-203
	Item no.: 216-204 Ferrule; Sleeve for 1.5 mm² / AWG 16; insulated; electro-tin plated; black	www.wago.com/216-204
	Item no.: 216-221 Ferrule; Sleeve for 0.5 mm² / 20 AWG; insulated; electro-tin plated; white	www.wago.com/216-221
	Item no.: 216-222 Ferrule; Sleeve for 0.75 mm² / 18 AWG; insulated; electro-tin plated; gray	www.wago.com/216-222
	Item no.: 216-223 Ferrule; Sleeve for 1 mm² / AWG 18; insulated; electro-tin plated; red	www.wago.com/216-223
	Item no.: 216-224 Ferrule; Sleeve for 1.5 mm² / AWG 16; insulated; electro-tin plated; black	www.wago.com/216-224
	Item no.: 216-301 Ferrule; Sleeve for 0.25 mm² / AWG 24; insulated; electro-tin plated; yellow	www.wago.com/216-301
	Item no.: 216-302 Ferrule; Sleeve for 0.34 mm² / 22 AWG; insulated; electro-tin plated; green	www.wago.com/216-302
	Item no.: 216-321 Ferrule; Sleeve for 0.25 mm² / AWG 24; insulated; electro-tin plated; yellow	www.wago.com/216-321
	Item no.: 216-322 Ferrule; Sleeve for 0.34 mm² / 22 AWG; insulated; electro-tin plated; green	www.wago.com/216-322
Insulation stop		
	Item no.: 727-197 Insulation stop; 0.08 - 0.2 mm² "s" (0.14 mm² "f-st"); 8 pieces/strip; white	www.wago.com/727-197
	Item no.: 727-198 Insulation stop; 0.25 mm² “s”; 0.14 - 0.25 mm² “f-st”; 8 pieces/strip; light gray	www.wago.com/727-198
	Item no.: 727-199 Insulation stop; 0.25 - 0.5 mm² "s+f-st"; 8 pieces/strip; dark gray	www.wago.com/727-199

Downloads

Documentation

Bid Text

727-219 GAEB docx - Datei	Feb 21, 2019	docx 15.4 kB	Download
727-219 GAEB X81 - Datei	Feb 19, 2019	xml 3.4 kB	Download

Subject to changes. Please also observe the further product documentation!

WAGO Kontakttechnik GmbH & Co. KG
Hansastr. 27
32423 Minden
Phone: +49571 887-0 | Fax: +49571 887-169
Email: info.de@wago.com | Web: www.wago.com

Do you have any questions about our products?
We are always happy to take your call at +49 (571) 887-44222.

Additional Information

Technical explanations	Apr 3, 2019	pdf 2.1 MB	Download

CAD/CAE-Data

CAD data

2D/3D Models 727-219	URL	Download

CAE data

EPLAN Data Portal 727-219	URL	Download
WSCAD Universe 727-219	URL	Download

Installation Notes

Assembly

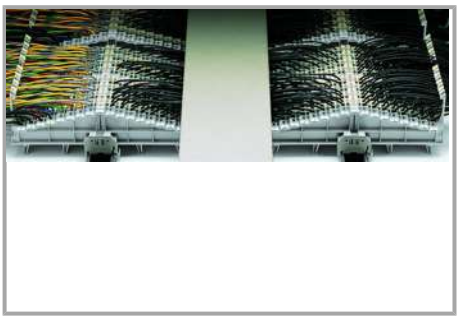

Example:

Left: Main cables fed through locking clips on the field side

Right: Control cables fed between locking clips

Center: Wiring of both patching sides

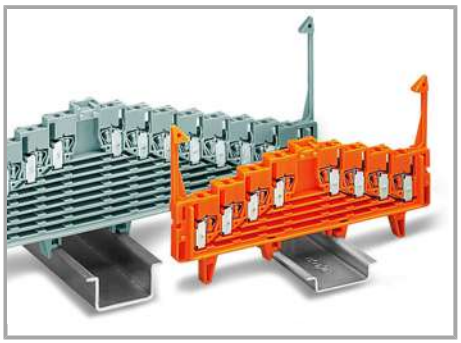

Terminal blocks for DIN 35 x 7.5 mm or DIN 35 x 15 mm rails are available.

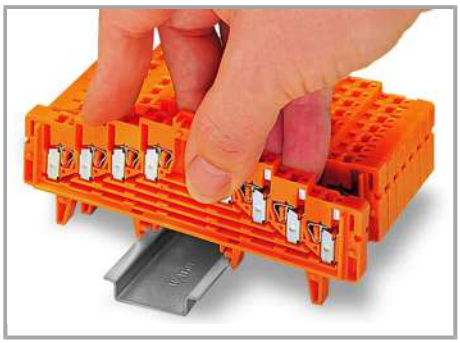

Snap individual 4- or 8-level terminal blocks onto the carrier rail.

Subject to changes. Please also observe the further product documentation!

WAGO Kontakttechnik GmbH & Co. KG
Hansastr. 27
32423 Minden
Phone: +49571 887-0 | Fax: +49571 887-169
Email: info.de@wago.com | Web: www.wago.com

Do you have any questions about our products?
We are always happy to take your call at +49 (571) 887-44222.

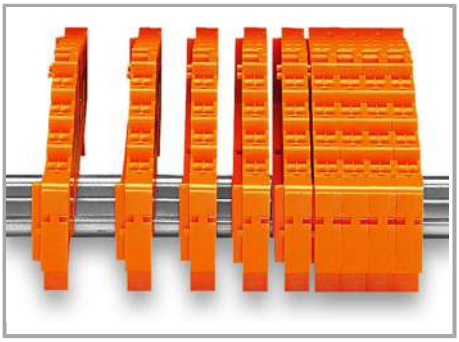

Slide terminal blocks together.

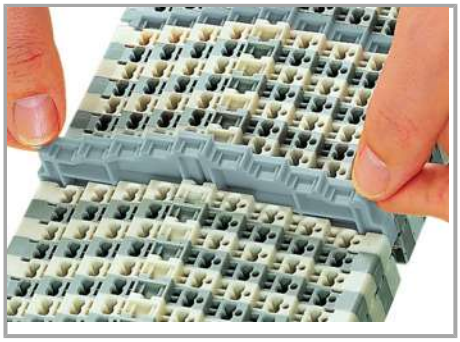

Grip end plate at both sides and:

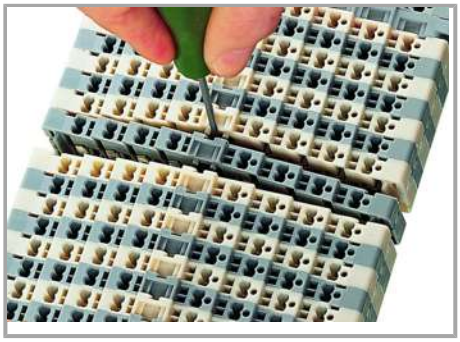

Open the assembly by laterally sliding a block via operating tool (2.5 x 0.4 mm blade).

- push down (assembly)
-
- pull up (removal)
-

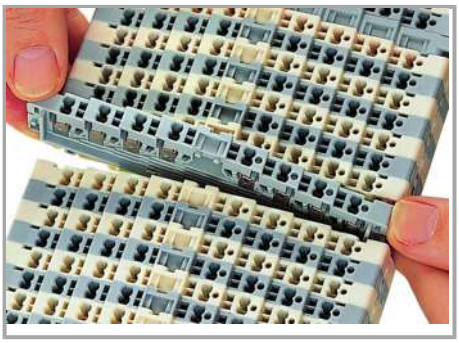

Slide terminal block and remove from the rail with a levering action.

Inserting a conductor

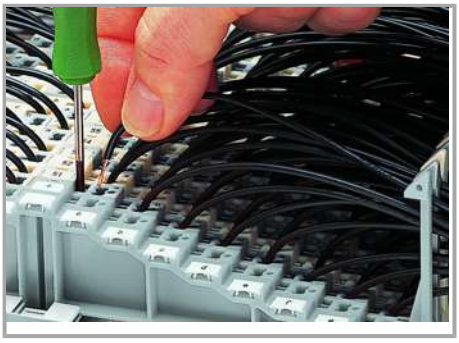

CAGE CLAMP® connection

Inserting a conductor via 210-719 Operating Tool (2.5 x 0.4 mm blade).

Max. cross section for uninsulated ferrules 1 mm² / 18 AWG, for insulated ferrules 0.75 mm² / 20 AWG.

Testing

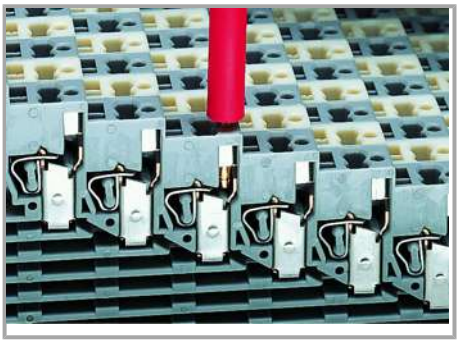

Special test contact for 2.3 mm Ø test plug.

Ex Application

WAGO Kontakttechnik GmbH & Co. KG
Hansastr. 27
32423 Minden
Phone: +49571 887-0 | Fax: +49571 887-169
Email: info.de@wago.com | Web: www.wago.com

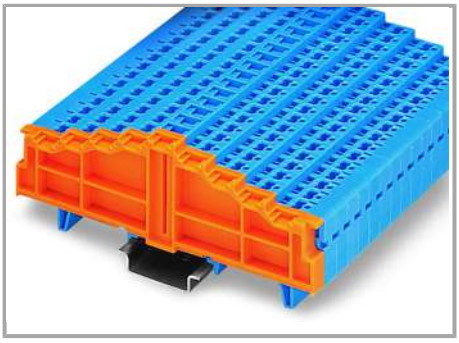

Blue terminal blocks for matrix patching are suitable for Ex i applications.

Using terminal blocks with locking clips, the wiring space between the terminal strips can be covered with a wiring duct cover.

Marking

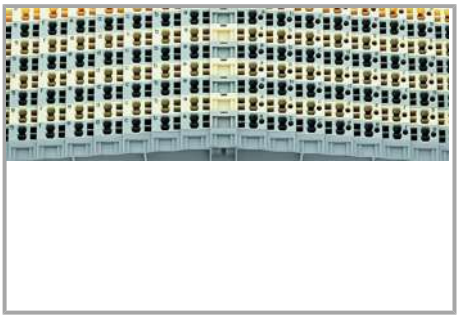

Connection points identified via factory-direct printing

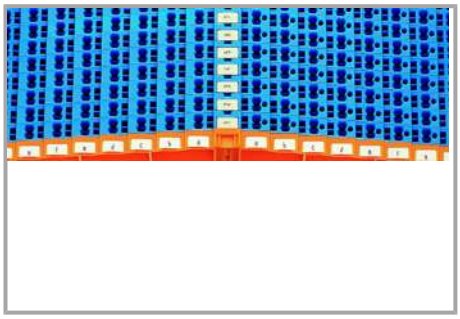

Marking coordinates via WMB Multi Marking System.

Subject to changes. Please also observe the further product documentation!

WAGO Kontakttechnik GmbH & Co. KG
Hansastr. 27
32423 Minden
Phone: +49571 887-0 | Fax: +49571 887-169
Email: info.de@wago.com | Web: www.wago.com

Do you have any questions about our products?
We are always happy to take your call at +49 (571) 887-44222.