Data sheet | Item number: 734-368

2-conductor combi strip; 100% protected against mismating; 1.5 mm²; Pin spacing 3.5 mm; 8-pole; 1,50 mm²; light gray

www.wago.com/734-368

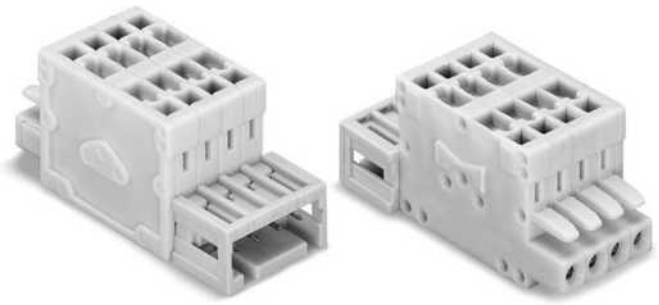

RoHS ✓ Compliant

BOMcheck.net

Color:

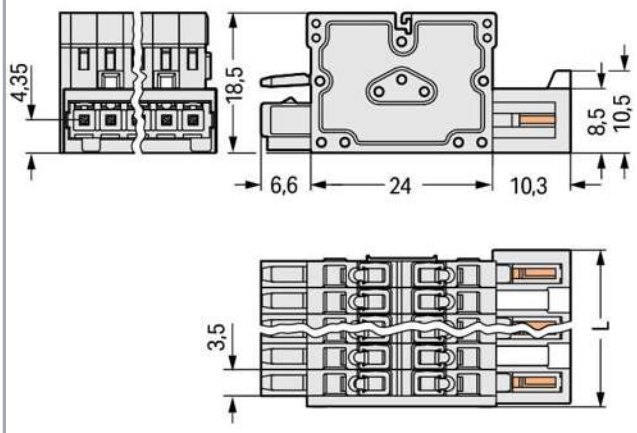

L = (pole no. – 1) x pin spacing + 5.9 mm + 0.45 mm

Item description

- Universal connection for all conductor types
- 2-conductor strips combine pin and socket connections
- Multiply potentials
- Strain relief plates for factory and field assembly
- Supply via pin-contact side
- Combi strips may be connected to multiply outputs
- 100% protected against mismating
- Coding via coding fingers

Safety information 1:

The *MULTI CONNECTION SYSTEM (MCS)* is designed without breaking capacity for compliance with DIN EN 61984. When used as intended, MCS Connectors shall not be connected/disconnected when live or under load. The circuit design should ensure header pins, which can be touched, are not live when unmated.

Subject to changes. Please also observe the further product documentation!

WAGO Kontakttechnik GmbH & Co. KG
Hansastr. 27
32423 Minden
Phone: +49571 887-0 | Fax: +49571 887-169
Email: info.de@wago.com | Web: www.wago.com

Do you have any questions about our products?
We are always happy to take your call at +49 (571) 887-44222.

Data
Electrical data

Ratings per IEC/EN 60664-1

Ratings per	IEC/EN 60664-1
Rated voltage (III / 3)	160 V
Rated impulse voltage (III / 3)	2.5 kV
Rated voltage (III / 2)	160 V
Rated impulse voltage (III / 2)	2.5 kV
Rated voltage (II / 2)	320 V
Rated impulse voltage (II / 2)	2.5 kV
Rated current	10 A
Legend (ratings)	(III / 2) ≙ Overvoltage category III / Pollution degree 2

Approvals per UL 1059

Rated voltage UL (Use Group B)	300 V
Rated current UL (Use Group B)	10 A
Rated voltage UL (Use Group D)	300 V
Rated current UL (Use Group D)	10 A
Approvals per	UL 1059

Approvals per CSA

Rated voltage CSA (Use Group B)	300 V
Rated current CSA (Use Group B)	10 A
Rated voltage CSA (Use Group D)	300 V
Rated current CSA (Use Group D)	10 A

Connection data

Connection technology	CAGE CLAMP®
Actuation type	Operating tool
Solid conductor	0.08 … 1.5 mm² / 28 … 14 AWG
Fine-stranded conductor	0.08 … 1.5 mm² / 28 … 14 AWG
Fine-stranded conductor with ferrule with plastic collar	0.25 … 1.5 mm²
Fine-stranded conductor with ferrule without plastic collar	0.25 … 1.5 mm²
Strip length	6 … 7 mm / 0.24 … 0.28 inch

Subject to changes. Please also observe the further product documentation!

WAGO Kontakttechnik GmbH & Co. KG
Hansastr. 27
32423 Minden
Phone: +49571 887-0 | Fax: +49571 887-169
Email: info.de@wago.com | Web: www.wago.com

Do you have any questions about our products?
We are always happy to take your call at +49 (571) 887-44222.

No. of poles	8
Total number of connection points	16
Total number of potentials	8
Number of connection types	1
Number of levels	1
Note (conductor cross-section)	Terminating 1.5 mm² conductors is possible; however insulation diameter does not allow clamping units to be terminated in a row.
Conductor entry direction to mating direction	0 °

Geometrical Data

Pin spacing	3.5 mm / 0.138 inch
Width	30.85 mm / 1.215 inch
Height	18.5 mm / 0.728 inch
Depth	40.9 mm / 1.61 inch

Plug connection

Contact type (pluggable connector)	Distribution connectors
Connector connection type	for conductors
Mismating protection	Yes

Material Data

Color	light gray
Material group	I
Insulating material	Polyamide 66 (PA 66)
Flammability class per UL94	V0
Clamping spring material	Chrome nickel spring steel (CrNi)
Contact material	Copper alloy
Contact plating	tin-plated
Fire load	0.294 MJ
Weight	19.2 g

Environmental Requirements

Limit temperature range	-60 … +100 °C

Commercial data

Product Group	3 (Multi Conn. System)

Subject to changes. Please also observe the further product documentation!

WAGO Kontakttechnik GmbH & Co. KG
Hansastr. 27
32423 Minden
Phone: +49571 887-0 | Fax: +49571 887-169
Email: info.de@wago.com | Web: www.wago.com

Do you have any questions about our products?
We are always happy to take your call at +49 (571) 887-44222.

Packaging type	BOX
Country of origin	PL
GTIN	4045454214579
Customs Tariff No.	85366990990

Approvals / Certificates

Country specific Approvals

Logo	Approval	Additional Approval Text	Certificate name
	CB DEKRA Certification B.V.	EN 61984	NL-54190
	CSA DEKRA Certification B.V.	C22.2	1465035
	KEMA/KEUR DEKRA Certification B.V.	EN 61984	71-105522

Ship Approvals

Logo	Approval	Additional Approval Text	Certificate name
	DNV GL Det Norske Veritas, Germanischer Lloyd	-	TAE000016Z
	LR Lloyds Register	IEC 61984	96/20035 (E5)

UL-Approvals

Logo	Approval	Additional Approval Text	Certificate name
	UR Underwriters Laboratories Inc.	UL 1059	20190122-E45172

Subject to changes. Please also observe the further product documentation!

WAGO Kontakttechnik GmbH & Co. KG
Hansastr. 27
32423 Minden
Phone: +49571 887-0 | Fax: +49571 887-169
Email: info.de@wago.com | Web: www.wago.com

Do you have any questions about our products?
We are always happy to take your call at +49 (571) 887-44222.

Counterpart

	Item no.734-108 1-conductor female plug; 100% protected against mismating; 1.5 mm²; Pin spacing 3.5 mm; 8-pole; 1,50 mm²; light gray	www.wago.com/734-108
	Item no.734-308 1-conductor male connector; 100% protected against mismating; 1.5 mm²; Pin spacing 3.5 mm; 8-pole; 1,50 mm²; light gray	www.wago.com/734-308

Compatible products

Coding		
	Item no.: 734-130 Coding key; to be snapped above top level; white	www.wago.com/734-130
	Item no.: 734-159 Coding key; to be snapped above top level; black	www.wago.com/734-159
check		
	Item no.: 735-500 Test pin; 1 mm Ø; with solder connection for test wire	www.wago.com/735-500
protection		
	Item no.: 734-420 Cover for male connectors; for 734 Series; IP20 protection; black	www.wago.com/734-420
ferrule		
	Item no.: 216-101 Ferrule; Sleeve for 0.5 mm² / AWG 22; uninsulated; electro-tin plated	www.wago.com/216-101
	Item no.: 216-102 Ferrule; Sleeve for 0.75 mm² / AWG 20; uninsulated; electro-tin plated	www.wago.com/216-102
	Item no.: 216-103 Ferrule; Sleeve for 1 mm² / AWG 18; uninsulated; electro-tin plated	www.wago.com/216-103
	Item no.: 216-104 Ferrule; Sleeve for 1.5 mm² / AWG 16; uninsulated; electro-tin plated	www.wago.com/216-104
	Item no.: 216-121 Ferrule; Sleeve for 0.5 mm² / AWG 22; uninsulated; electro-tin plated	www.wago.com/216-121

Subject to changes. Please also observe the further product documentation!

WAGO Kontakttechnik GmbH & Co. KG
Hansastr. 27
32423 Minden
Phone: +49571 887-0 | Fax: +49571 887-169
Email: info.de@wago.com | Web: www.wago.com

Do you have any questions about our products?
We are always happy to take your call at +49 (571) 887-44222.

	Item no.: 216-122 Ferrule; Sleeve for 0.75 mm² / AWG 20; uninsulated; electro-tin plated	www.wago.com/216-122
	Item no.: 216-123 Ferrule; Sleeve for 1 mm² / AWG 18; uninsulated; electro-tin plated	www.wago.com/216-123
	Item no.: 216-124 Ferrule; Sleeve for 1.5 mm² / AWG 16; uninsulated; electro-tin plated	www.wago.com/216-124
	Item no.: 216-131 Ferrule; Sleeve for 0.25 mm² / AWG 24; uninsulated; electro-tin plated	www.wago.com/216-131
	Item no.: 216-132 Ferrule; Sleeve for 0.34 mm² / AWG 24; uninsulated; electro-tin plated	www.wago.com/216-132
	Item no.: 216-141 Ferrule; Sleeve for 0.5 mm² / 20 AWG; uninsulated; electro-tin plated; electrolytic copper; gastight crimped; acc. to DIN 46228, Part 1/08.92	www.wago.com/216-141
	Item no.: 216-142 Ferrule; Sleeve for 0.75 mm² / 18 AWG; uninsulated; electro-tin plated; electrolytic copper; gastight crimped; acc. to DIN 46228, Part 1/08.92	www.wago.com/216-142
	Item no.: 216-143 Ferrule; Sleeve for 1 mm² / AWG 18; uninsulated; electro-tin plated; electrolytic copper; gastight crimped; acc. to DIN 46228, Part 1/08.92	www.wago.com/216-143
	Item no.: 216-144 Ferrule; Sleeve for 1.5 mm² / AWG 16; uninsulated; electro-tin plated; electrolytic copper; gastight crimped; acc. to DIN 46228, Part 1/08.92	www.wago.com/216-144
	Item no.: 216-151 Ferrule; Sleeve for 0.25 mm² / AWG 24; uninsulated; electro-tin plated	www.wago.com/216-151
	Item no.: 216-152 Ferrule; Sleeve for 0.34 mm² / AWG 24; uninsulated; electro-tin plated	www.wago.com/216-152
	Item no.: 216-201 Ferrule; Sleeve for 0.5 mm² / 20 AWG; insulated; electro-tin plated; white	www.wago.com/216-201
	Item no.: 216-202 Ferrule; Sleeve for 0.75 mm² / 18 AWG; insulated; electro-tin plated; gray	www.wago.com/216-202
	Item no.: 216-203 Ferrule; Sleeve for 1 mm² / AWG 18; insulated; electro-tin plated; red	www.wago.com/216-203
	Item no.: 216-204 Ferrule; Sleeve for 1.5 mm² / AWG 16; insulated; electro-tin plated; black	www.wago.com/216-204
	Item no.: 216-221 Ferrule; Sleeve for 0.5 mm² / 20 AWG; insulated; electro-tin plated; white	www.wago.com/216-221
	Item no.: 216-222 Ferrule; Sleeve for 0.75 mm² / 18 AWG; insulated; electro-tin plated; gray	www.wago.com/216-222

Item no.: 216-223

Subject to changes. Please also observe the further product documentation!

WAGO Kontakttechnik GmbH & Co. KG
Hansastr. 27
32423 Minden
Phone: +49571 887-0 | Fax: +49571 887-169
Email: info.de@wago.com | Web: www.wago.com

Do you have any questions about our products?
We are always happy to take your call at +49 (571) 887-44222.

	Ferrule; Sleeve for 1 mm² / AWG 18; insulated; electro-tin plated; red	www.wago.com/216-223
	Item no.: 216-224 Ferrule; Sleeve for 1.5 mm² / AWG 16; insulated; electro-tin plated; black	www.wago.com/216-224
	Item no.: 216-241 Ferrule; Sleeve for 0.5 mm² / 20 AWG; insulated; electro-tin plated; electrolytic copper; gastight crimped; acc. to DIN 46228, Part 4/09.90; white	www.wago.com/216-241
	Item no.: 216-242 Ferrule; Sleeve for 0.75 mm² / 18 AWG; insulated; electro-tin plated; electrolytic copper; gastight crimped; acc. to DIN 46228, Part 4/09.90; gray	www.wago.com/216-242
	Item no.: 216-243 Ferrule; Sleeve for 1 mm² / AWG 18; insulated; electro-tin plated; electrolytic copper; gastight crimped; acc. to DIN 46228, Part 4/09.90; red	www.wago.com/216-243
	Item no.: 216-244 Ferrule; Sleeve for 1.5 mm² / AWG 16; insulated; electro-tin plated; electrolytic copper; gastight crimped; acc. to DIN 46228, Part 4/09.90; black	www.wago.com/216-244
	Item no.: 216-262 Ferrule; Sleeve for 0.75 mm² / 18 AWG; insulated; electro-tin plated; electrolytic copper; gastight crimped; acc. to DIN 46228, Part 4/09.90; gray	www.wago.com/216-262
	Item no.: 216-263 Ferrule; Sleeve for 1 mm² / AWG 18; insulated; electro-tin plated; electrolytic copper; gastight crimped; acc. to DIN 46228, Part 4/09.90; red	www.wago.com/216-263
	Item no.: 216-264 Ferrule; Sleeve for 1.5 mm² / AWG 16; insulated; electro-tin plated; electrolytic copper; gastight crimped; acc. to DIN 46228, Part 4/09.90; black	www.wago.com/216-264
	Item no.: 216-284 Ferrule; Sleeve for 1.5 mm² / AWG 16; insulated; electro-tin plated; electrolytic copper; gastight crimped; acc. to DIN 46228, Part 4/09.90; black	www.wago.com/216-284
	Item no.: 216-301 Ferrule; Sleeve for 0.25 mm² / AWG 24; insulated; electro-tin plated; yellow	www.wago.com/216-301
	Item no.: 216-302 Ferrule; Sleeve for 0.34 mm² / 22 AWG; insulated; electro-tin plated; green	www.wago.com/216-302
	Item no.: 216-321 Ferrule; Sleeve for 0.25 mm² / AWG 24; insulated; electro-tin plated; yellow	www.wago.com/216-321
	Item no.: 216-322 Ferrule; Sleeve for 0.34 mm² / 22 AWG; insulated; electro-tin plated; green	www.wago.com/216-322
Marking accessories		
	Item no.: 210-332/350-202 Marking strips; as a DIN A4 sheet; MARKED; 1-16 (240x); Height of marker strip: 3 mm; Strip length 182 mm; Horizontal marking; Self-adhesive; white	www.wago.com/210-332/350-202
	Item no.: 210-332/350-204 Marking strips; as a DIN A4 sheet; MARKED; 17-32 (240x); Height of marker strip: 3 mm; Strip length 182 mm; Horizontal marking; Self-adhesive; white	www.wago.com/210-332/350-204

Subject to changes. Please also observe the further product documentation!

WAGO Kontakttechnik GmbH & Co. KG
Hansastr. 27
32423 Minden
Phone: +49571 887-0 | Fax: +49571 887-169
Email: info.de@wago.com | Web: www.wago.com

Do you have any questions about our products?
We are always happy to take your call at +49 (571) 887-44222.

	Item no.: 210-332/350-206 Marking strips; as a DIN A4 sheet; MARKED; 33-48 (240x); Height of marker strip: 3 mm; Strip length 182 mm; Horizontal marking; Self-adhesive; white	www.wago.com/210-332/350-206

Strain relief plate

	Item no.: 734-129 Strain relief plate; light gray	www.wago.com/734-129

Downloads

Documentation

Additional Information

Technical explanations	Apr 3, 2019	pdf 3.6 MB	Download

CAD/CAE-Data

CAD data

2D/3D Models 734-368	URL	Download

CAE data

EPLAN Data Portal 734-368	URL	Download

Installation Notes

Product family

MCS MINI
Show all products from the family

Subject to changes. Please also observe the further product documentation!

WAGO Kontakttechnik GmbH & Co. KG
Hansastr. 27
32423 Minden
Phone: +49571 887-0 | Fax: +49571 887-169
Email: info.de@wago.com | Web: www.wago.com

Do you have any questions about our products?
We are always happy to take your call at +49 (571) 887-44222.