Data sheet | Item number: 734-509/037-000

THT female header; 0.9 x 0.9 mm solder pin; straight; 100% protected against mismating; Locking lever; Pin spacing 3.81 mm; 9-pole; orange

www.wago.com/734-509_037-000

RoHS ✓ Compliant

BOMcheck.net

Color:

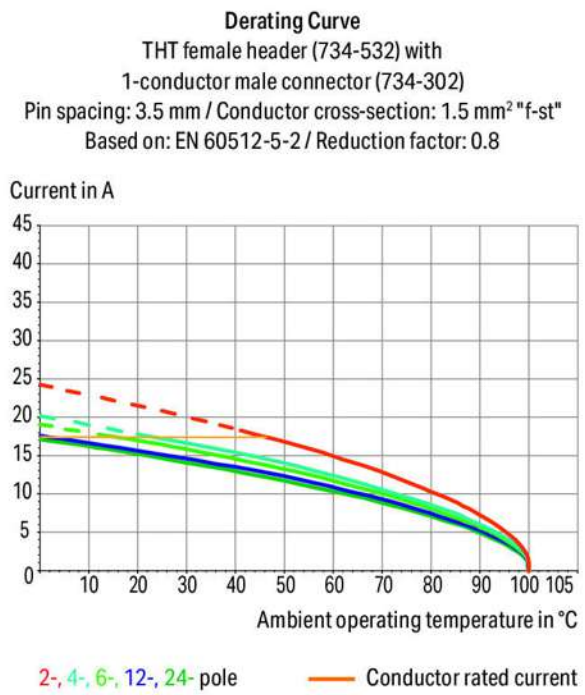

Subject to changes. Please also observe the further product documentation!

WAGO Kontakttechnik GmbH & Co. KG
Hansastr. 27
32423 Minden
Phone: +49571 887-0 | Fax: +49571 887-169
Email: info.de@wago.com | Web: www.wago.com

Do you have any questions about our products?
We are always happy to take your call at +49 (571) 887-44222.

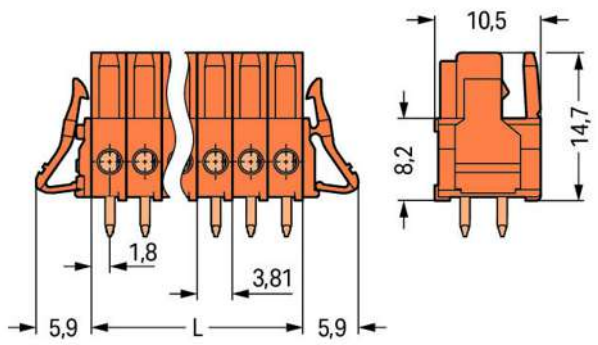

L = pole no. x pin spacing

Item description

- Horizontal or vertical PCB mounting via straight or angled solder pins
- Integrated test ports for 2 mm Ø test plugs
- For board-to-board and board-to-wire connections
- Touch-proof PCB outputs
- Easy-to-identify inputs and outputs
- 100% protected against mismating
- Coding via coding fingers

Safety information 1:
The *MULTI CONNECTION SYSTEM (MCS)* is designed without breaking capacity for compliance with DIN EN 61984. When used as intended, MCS Connectors shall not be connected/disconnected when live or under load. The circuit design should ensure header pins, which can be touched, are not live when unmated.

Data
Electrical data

Ratings per IEC/EN 60664-1

Ratings per	IEC/EN 60664-1
Rated voltage (III / 3)	160 V
Rated impulse voltage (III / 3)	2.5 kV
Rated voltage (III / 2)	160 V

Subject to changes. Please also observe the further product documentation!

WAGO Kontakttechnik GmbH & Co. KG
Hansastr. 27
32423 Minden
Phone: +49571 887-0 | Fax: +49571 887-169
Email: info.de@wago.com | Web: www.wago.com

Do you have any questions about our products?
We are always happy to take your call at +49 (571) 887-44222.

Rated impulse voltage (III / 2)	2.5 kV
Rated voltage (II / 2)	320 V
Rated impulse voltage (II / 2)	2.5 kV
Rated current	10 A
Legend (ratings)	(III / 2) ≙ Overvoltage category III / Pollution degree 2

Approvals per UL 1059

Rated voltage UL (Use Group B)	300 V
Rated current UL (Use Group B)	10 A
Rated voltage UL (Use Group D)	300 V
Rated current UL (Use Group D)	10 A
Approvals per	UL 1059

Approvals per CSA

Rated voltage CSA (Use Group B)	300 V
Rated current CSA (Use Group B)	10 A
Rated voltage CSA (Use Group D)	300 V
Rated current CSA (Use Group D)	10 A

Connection data

No. of poles	9
Total number of connection points	9
Total number of potentials	9
Number of connection types	1
Number of levels	1

Geometrical Data

Pin spacing	3.81 mm / 0.15 inch
Width	46.09 mm / 1.815 inch
Height	18.5 mm / 0.728 inch
Height from the surface	14.7 mm / 0.579 inch
Depth	10.5 mm / 0.413 inch
Solder pin length	3.8 mm
Solder pin dimensions	0.9 x 0.9 mm
Drilled hole diameter (tolerance)	$1.4^{(+0.1)}$ mm

Subject to changes. Please also observe the further product documentation!

WAGO Kontakttechnik GmbH & Co. KG
Hansastr. 27
32423 Minden
Phone: +49571 887-0 | Fax: +49571 887-169
Email: info.de@wago.com | Web: www.wago.com

Do you have any questions about our products?
We are always happy to take your call at +49 (571) 887-44222.

Plug connection

Contact type (pluggable connector)	Female connector/socket
Connector connection type	for PCBs
Mismating protection	Yes
Mating direction to the PCB	90 °
Locking of plug-in connection	locking lever

PCB contact

PCB contact	THT
Solder pin arrangement	over the entire female connector, in line
Number of solder pins per potential	1

Material Data

Color	orange
Material group	I
Insulating material	Polyamide 66 (PA 66)
Flammability class per UL94	V0
Contact material	Copper alloy
Contact plating	tin-plated
Fire load	0.111 MJ
Weight	5.8 g

Environmental Requirements

Limit temperature range	-60 … +100 °C

Commercial data

Product Group	3 (Multi Conn. System)
Packaging type	BOX
Country of origin	DE
GTIN	4045454120504
Customs Tariff No.	85366990990

Approvals / Certificates

Country specific Approvals

Logo	Approval	Additional Approval Text	Certificate name

Subject to changes. Please also observe the further product documentation!

WAGO Kontakttechnik GmbH & Co. KG
Hansastr. 27
32423 Minden
Phone: +49571 887-0 | Fax: +49571 887-169
Email: info.de@wago.com | Web: www.wago.com

Do you have any questions about our products?
We are always happy to take your call at +49 (571) 887-44222.

	CB DEKRA Certification B.V.	EN 61984	NL-54190
	CSA DEKRA Certification B.V.	C22.2	1465035
	KEMA/KEUR DEKRA Certification B.V.	EN 61984	71-105522

Ship Approvals

Logo	Approval	Additional Approval Text	Certificate name
	DNV GL Det Norske Veritas, Germanischer Lloyd	-	TAE000016Z

UL-Approvals

Logo	Approval	Additional Approval Text	Certificate name
	UL UL International Germany GmbH	UL 1977	20150318-E45171
	UR Underwriters Laboratories Inc.	UL 1059	20190122-E45172

Counterpart

Item no.734-339
1-conductor male connector; 100% protected against mismating; 1.5 mm²; Pin spacing 3.81 mm; 9-pole; 1,50 mm²; orange

www.wago.com/734-339

Downloads

Documentation

Additional Information

Technical explanations	Apr 3, 2019	pdf 3.6 MB	Download

Subject to changes. Please also observe the further product documentation!

WAGO Kontakttechnik GmbH & Co. KG
Hansastr. 27
32423 Minden
Phone: +49571 887-0 | Fax: +49571 887-169
Email: info.de@wago.com | Web: www.wago.com

Do you have any questions about our products?
We are always happy to take your call at +49 (571) 887-44222.

CAD/CAE-Data

CAE data

EPLAN Data Portal 734-509/037-000	URL	Download

PCB Design

Symbol and Footprint 734-509/037-000	URL	Download

CAx data for your PCB design, consisting of "schematic symbols and PCB footprints", allow easy integration of the WAGO component into your development environment.

Supported formats:

- Accel EDA 14 & 15
- Altium 6 to current version
- Cadence Allegro
- DesignSpark
- Eagle Libraries
- KiCad
- Mentor Graphics BoardStation
- Mentor Graphics Design Architect
- Mentor Graphics Design Expedition 99 and 2000
- OrCAD 9.X PCB and Capture
- PADS PowerPCB 3, 3.5, 4.X, and 5.X
- PADS PowerPCB and PowerLogic 3.0
- PCAD 2000, 2001, 2002, 2004, and 2006
- Pulsonix 8.5 or newer
- STL
- 3D STEP
- TARGET 3001!
- View Logic ViewDraw
- Quadcept
- Zuken CadStar 3 and 4
- Zuken CR-5000 and CR-8000

PCB Component Libraries (EDA), PCB CAD Library Ultra Librarian

Subject to changes. Please also observe the further product documentation!

WAGO Kontakttechnik GmbH & Co. KG
Hansastr. 27
32423 Minden
Phone: +49571 887-0 | Fax: +49571 887-169
Email: info.de@wago.com | Web: www.wago.com

Do you have any questions about our products?
We are always happy to take your call at +49 (571) 887-44222.

Installation Notes

Product family

MCS MINI
Show all products from the family

Subject to changes. Please also observe the further product documentation!

WAGO Kontakttechnik GmbH & Co. KG
Hansastr. 27
32423 Minden
Phone: +49571 887-0 | Fax: +49571 887-169
Email: info.de@wago.com | Web: www.wago.com

Do you have any questions about our products?
We are always happy to take your call at +49 (571) 887-44222.