Data sheet | Item number: 745-3152

PCB terminal block; 4 mm²; Pin spacing 7.5 mm; 2-pole; CAGE CLAMP®; 4,00 mm²; gray

www.wago.com/745-3152

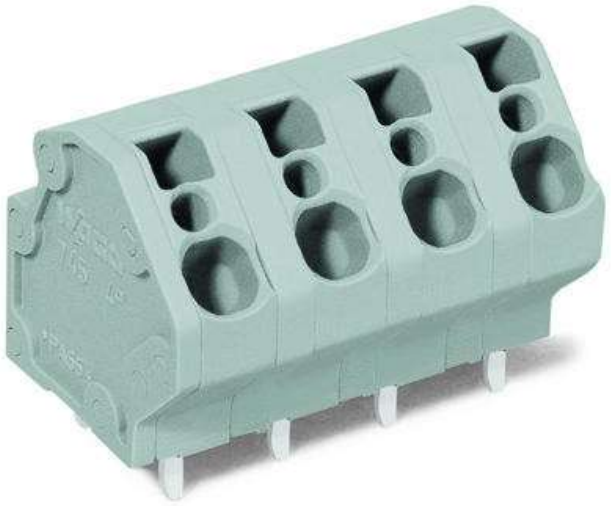

RoHS ✓ Compliant

BOMcheck.net

Color:

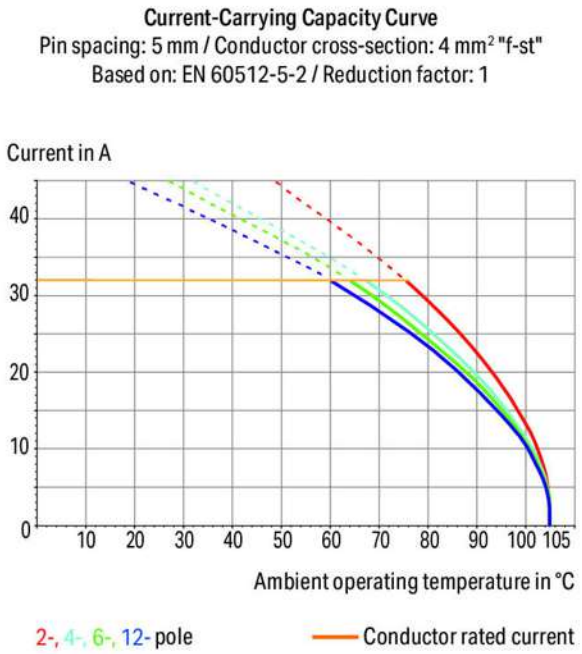

Subject to changes. Please also observe the further product documentation!

WAGO Kontakttechnik GmbH & Co. KG
Hansastr. 27
32423 Minden
Phone: +49571 887-0 | Fax: +49571 887-169
Email: info.de@wago.com | Web: www.wago.com

Do you have any questions about our products?
We are always happy to take your call at +49 (571) 887-44222.

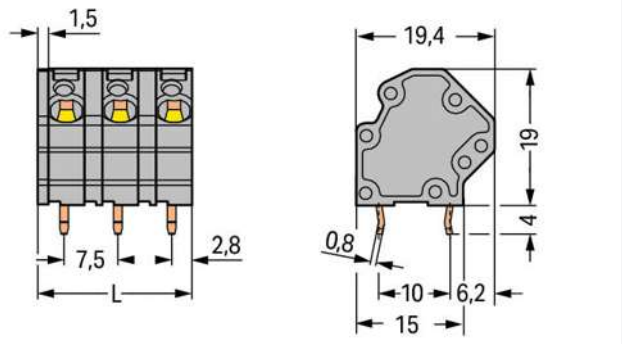

L = (pole no. – 1) x pin spacing + 5 mm + 1.5 mm

Item description

- Terminal strips with screwdriver-actuated CAGE CLAMP® connection
- Versions with Ex approval
- Mixed-color PCB terminal strips from factory
- Space-saving configuration of terminal strips when placed behind each other
- Custom color combinations
- Double solder pins for high mechanical stability
- Integrated testing tap

Data

Electrical data

Ratings per IEC/EN 60664-1

Ratings per	IEC/EN 60664-1
Rated voltage (III / 3)	500 V
Rated impulse voltage (III / 3)	6 kV
Rated voltage (III / 2)	630 V
Rated impulse voltage (III / 2)	6 kV
Rated voltage (II / 2)	1000 V
Rated impulse voltage (II / 2)	6 kV
Rated current	32 A

Subject to changes. Please also observe the further product documentation!

WAGO Kontakttechnik GmbH & Co. KG
Hansastr. 27
32423 Minden
Phone: +49571 887-0 | Fax: +49571 887-169
Email: info.de@wago.com | Web: www.wago.com

Do you have any questions about our products?
We are always happy to take your call at +49 (571) 887-44222.

Legend (ratings)	(III / 2) ≙ Overvoltage category III / Pollution degree 2

Approvals per UL 1059

Rated voltage UL (Use Group B)	300 V
Rated current UL (Use Group B)	20 A
Rated voltage UL (Use Group C)	150 V
Rated current UL (Use Group C)	20 A
Rated voltage UL (Use Group D)	300 V
Rated current UL (Use Group D)	10 A
Approvals per	UL 1059

Approvals per CSA

Rated voltage CSA (Use Group B)	300 V
Rated current CSA (Use Group B)	20 A
Rated voltage CSA (Use Group C)	150 V
Rated current CSA (Use Group C)	20 A
Rated voltage CSA (Use Group D)	300 V
Rated current CSA (Use Group D)	10 A

Connection data

Connection technology	CAGE CLAMP®
Actuation type	Operating tool
Solid conductor	0,08 … 4 mm² / 28 … 12 AWG
Fine-stranded conductor	0,08 … 4 mm² / 28 … 12 AWG
Fine-stranded conductor with ferrule with plastic collar	0,25 … 2,5 mm²
Fine-stranded conductor with ferrule without plastic collar	0,25 … 2,5 mm²
Strip length	8 … 9 mm / 0.31 … 0.35 inch
Conductor entry angle to the PCB	45 °
No. of poles	2
Total number of connection points	2
Total number of potentials	2
Number of connection types	1
Number of levels	1

Geometrical Data

Pin spacing	7,5 mm / 0.295 inch

Subject to changes. Please also observe the further product documentation!

WAGO Kontakttechnik GmbH & Co. KG
Hansastr. 27
32423 Minden
Phone: +49571 887-0 | Fax: +49571 887-169
Email: info.de@wago.com | Web: www.wago.com

Do you have any questions about our products?
We are always happy to take your call at +49 (571) 887-44222.

Width	14 mm / 0.551 inch
Height	23 mm / 0.906 inch
Height from the surface	19 mm / 0.748 inch
Depth	19,4 mm / 0.764 inch
Solder pin length	4 mm
Solder pin dimensions	0,8 x 1,2 mm
Drilled hole diameter (tolerance)	1,5 $^{(+0,1)}$ mm

PCB contact

PCB contact	THT
Solder pin arrangement	over the entire terminal strip (in-line)
Number of solder pins per potential	2

Material Data

Color	gray
Material group	I
Insulating material	Polyamide 66 (PA 66)
Flammability class per UL94	V0
Clamping spring material	Chrome nickel spring steel (CrNi)
Contact material	Electrolytic copper (E_{Cu})
Contact plating	tin-plated
Fire load	0.076 MJ
Weight	4.3 g

Environmental Requirements

Limit temperature range	-60 … +105 °C

Commercial data

Product Group	4 (Printed Circuit)
Packaging type	BOX
Country of origin	PL
GTIN	4045454140311
Customs Tariff No.	85369010000

Approvals / Certificates

Country specific Approvals

Subject to changes. Please also observe the further product documentation!

WAGO Kontakttechnik GmbH & Co. KG
Hansastr. 27
32423 Minden
Phone: +49571 887-0 | Fax: +49571 887-169
Email: info.de@wago.com | Web: www.wago.com

Do you have any questions about our products?
We are always happy to take your call at +49 (571) 887-44222.

Logo	Approval	Additional Approval Text	Certificate name
	CCA DEKRA Certification B.V.	EN 60947	2160584.15
	CCA DEKRA Certification B.V.	EN 60947	NTR NL-7095
	CSA DEKRA Certification B.V.	C22.2 No. 158	1604421

UL-Approvals

Logo	Approval	Additional Approval Text	Certificate name
	cURus Underwriters Laboratories Inc.	UL 1059	E45172 sec6

Counterpart

Compatible products

ferrule

	Item no.: 216-106 Ferrule; Sleeve for 2.5 mm² / AWG 14; uninsulated; electro-tin plated	www.wago.com/216-106
	Item no.: 216-121 Ferrule; Sleeve for 0.5 mm² / AWG 22; uninsulated; electro-tin plated	www.wago.com/216-121
	Item no.: 216-122 Ferrule; Sleeve for 0.75 mm² / AWG 20; uninsulated; electro-tin plated	www.wago.com/216-122
	Item no.: 216-123 Ferrule; Sleeve for 1 mm² / AWG 18; uninsulated; electro-tin plated	www.wago.com/216-123

Subject to changes. Please also observe the further product documentation!

WAGO Kontakttechnik GmbH & Co. KG
Hansastr. 27
32423 Minden
Phone: +49571 887-0 | Fax: +49571 887-169
Email: info.de@wago.com | Web: www.wago.com

Do you have any questions about our products?
We are always happy to take your call at +49 (571) 887-44222.

	Item no.: 216-124 Ferrule; Sleeve for 1.5 mm² / AWG 16; uninsulated; electro-tin plated	www.wago.com/216-124
	Item no.: 216-131 Ferrule; Sleeve for 0.25 mm² / AWG 24; uninsulated; electro-tin plated	www.wago.com/216-131
	Item no.: 216-132 Ferrule; Sleeve for 0.34 mm² / AWG 24; uninsulated; electro-tin plated	www.wago.com/216-132
	Item no.: 216-141 Ferrule; Sleeve for 0.5 mm² / 20 AWG; uninsulated; electro-tin plated; electrolytic copper; gastight crimped; acc. to DIN 46228, Part 1/08.92	www.wago.com/216-141
	Item no.: 216-142 Ferrule; Sleeve for 0.75 mm² / 18 AWG; uninsulated; electro-tin plated; electrolytic copper; gastight crimped; acc. to DIN 46228, Part 1/08.92	www.wago.com/216-142
	Item no.: 216-143 Ferrule; Sleeve for 1 mm² / AWG 18; uninsulated; electro-tin plated; electrolytic copper; gastight crimped; acc. to DIN 46228, Part 1/08.92	www.wago.com/216-143
	Item no.: 216-144 Ferrule; Sleeve for 1.5 mm² / AWG 16; uninsulated; electro-tin plated; electrolytic copper; gastight crimped; acc. to DIN 46228, Part 1/08.92	www.wago.com/216-144
	Item no.: 216-151 Ferrule; Sleeve for 0.25 mm² / AWG 24; uninsulated; electro-tin plated	www.wago.com/216-151
	Item no.: 216-152 Ferrule; Sleeve for 0.34 mm² / AWG 24; uninsulated; electro-tin plated	www.wago.com/216-152
	Item no.: 216-221 Ferrule; Sleeve for 0.5 mm² / 20 AWG; insulated; electro-tin plated; white	www.wago.com/216-221
	Item no.: 216-222 Ferrule; Sleeve for 0.75 mm² / 18 AWG; insulated; electro-tin plated; gray	www.wago.com/216-222
	Item no.: 216-223 Ferrule; Sleeve for 1 mm² / AWG 18; insulated; electro-tin plated; red	www.wago.com/216-223
	Item no.: 216-224 Ferrule; Sleeve for 1.5 mm² / AWG 16; insulated; electro-tin plated; black	www.wago.com/216-224
	Item no.: 216-241 Ferrule; Sleeve for 0.5 mm² / 20 AWG; insulated; electro-tin plated; electrolytic copper; gastight crimped; acc. to DIN 46228, Part 4/09.90; white	www.wago.com/216-241
	Item no.: 216-242 Ferrule; Sleeve for 0.75 mm² / 18 AWG; insulated; electro-tin plated; electrolytic copper; gastight crimped; acc. to DIN 46228, Part 4/09.90; gray	www.wago.com/216-242
	Item no.: 216-243 Ferrule; Sleeve for 1 mm² / AWG 18; insulated; electro-tin plated; electrolytic copper; gastight crimped; acc. to DIN 46228, Part 4/09.90; red	www.wago.com/216-243
	Item no.: 216-244 Ferrule; Sleeve for 1.5 mm² / AWG 16; insulated; electro-tin plated; electrolytic copper; gastight crimped; acc. to DIN 46228, Part 4/09.90; black	www.wago.com/216-244

Subject to changes. Please also observe the further product documentation!

WAGO Kontakttechnik GmbH & Co. KG
Hansastr. 27
32423 Minden
Phone: +49571 887-0 | Fax: +49571 887-169
Email: info.de@wago.com | Web: www.wago.com

Do you have any questions about our products?
We are always happy to take your call at +49 (571) 887-44222.

	Item no.: 216-246 Ferrule; Sleeve for 2.5 mm² / AWG 14; insulated; electro-tin plated; electrolytic copper; gastight crimped; acc. to DIN 46228, Part 4/09.90; blue	www.wago.com/216-246
	Item no.: 216-262 Ferrule; Sleeve for 0.75 mm² / 18 AWG; insulated; electro-tin plated; electrolytic copper; gastight crimped; acc. to DIN 46228, Part 4/09.90; gray	www.wago.com/216-262
	Item no.: 216-263 Ferrule; Sleeve for 1 mm² / AWG 18; insulated; electro-tin plated; electrolytic copper; gastight crimped; acc. to DIN 46228, Part 4/09.90; red	www.wago.com/216-263
	Item no.: 216-264 Ferrule; Sleeve for 1.5 mm² / AWG 16; insulated; electro-tin plated; electrolytic copper; gastight crimped; acc. to DIN 46228, Part 4/09.90; black	www.wago.com/216-264
	Item no.: 216-266 Ferrule; Sleeve for 2.5 mm² / AWG 14; insulated; electro-tin plated; electrolytic copper; gastight crimped; acc. to DIN 46228, Part 4/09.90; blue	www.wago.com/216-266
	Item no.: 216-284 Ferrule; Sleeve for 1.5 mm² / AWG 16; insulated; electro-tin plated; electrolytic copper; gastight crimped; acc. to DIN 46228, Part 4/09.90; black	www.wago.com/216-284
	Item no.: 216-286 Ferrule; Sleeve for 2.5 mm² / AWG 14; insulated; electro-tin plated; electrolytic copper; gastight crimped; acc. to DIN 46228, Part 4/09.90; blue	www.wago.com/216-286
	Item no.: 216-321 Ferrule; Sleeve for 0.25 mm² / AWG 24; insulated; electro-tin plated; yellow	www.wago.com/216-321
	Item no.: 216-322 Ferrule; Sleeve for 0.34 mm² / 22 AWG; insulated; electro-tin plated; green	www.wago.com/216-322
tools		
	Item no.: 210-657 Operating tool; Blade: 3.5 x 0.5 mm; with a partially insulated shaft; short	www.wago.com/210-657
	Item no.: 210-658 Operating tool; Blade: 3.5 x 0.5 mm; with a partially insulated shaft; angled; short	www.wago.com/210-658
	Item no.: 210-720 Operating tool; Blade: 3.5 x 0.5 mm; with a partially insulated shaft	www.wago.com/210-720
check		
	Item no.: 210-136 Test plug; 2 mm Ø; with 500 mm cable; red	www.wago.com/210-136
	Item no.: 210-137 Test plug; 2.3 mm Ø; with 500 mm cable; yellow	www.wago.com/210-137
Marking accessories		
	Item no.: 210-332/750-020 Marking strips; as a DIN A4 sheet; MARKED; 1-20 (80x); Height of marker strip: 3 mm; Strip length 182 mm; Horizontal marking; Self-adhesive; white	www.wago.com/210-332/750-020

Subject to changes. Please also observe the further product documentation!

WAGO Kontakttechnik GmbH & Co. KG
Hansastr. 27
32423 Minden
Phone: +49571 887-0 | Fax: +49571 887-169
Email: info.de@wago.com | Web: www.wago.com

Do you have any questions about our products?
We are always happy to take your call at +49 (571) 887-44222.

Downloads

Documentation

Additional Information

Technical explanations	Apr 3, 2019	pdf 3.6 MB	Download

CAD/CAE-Data

CAD data

2D/3D Models 745-3152	URL	Download

CAE data

EPLAN Data Portal 745-3152	URL	Download

PCB Design

Symbol and Footprint 745-3152	URL	Download

CAx data for your PCB design, consisting of "schematic symbols and PCB footprints", allow easy integration of the WAGO component into your development environment.

Supported formats:

- Accel EDA 14 & 15
- Altium 6 to current version
- Cadence Allegro
- DesignSpark
- Eagle Libraries
- KiCad
- Mentor Graphics BoardStation
- Mentor Graphics Design Architect
- Mentor Graphics Design Expedition 99 and 2000
- OrCAD 9.X PCB and Capture
- PADS PowerPCB 3, 3.5, 4.X, and 5.X
- PADS PowerPCB and PowerLogic 3.0
- PCAD 2000, 2001, 2002, 2004, and 2006
- Pulsonix 8.5 or newer
- STL
- 3D STEP
- TARGET 3001!

Subject to changes. Please also observe the further product documentation!

WAGO Kontakttechnik GmbH & Co. KG
Hansastr. 27
32423 Minden
Phone: +49571 887-0 | Fax: +49571 887-169
Email: info.de@wago.com | Web: www.wago.com

Do you have any questions about our products?
We are always happy to take your call at +49 (571) 887-44222.

- View Logic ViewDraw
- Quadcept
- Zuken CadStar 3 and 4
- Zuken CR-5000 and CR-8000

PCB Component Libraries (EDA), PCB CAD Library Ultra Librarian

Installation Notes

Conductor termination

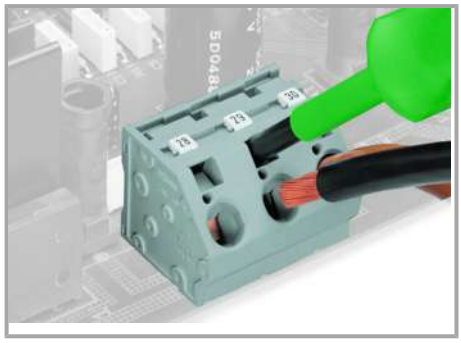

Inserting/removing a conductor via 5.5 mm screwdriver – 745 Series, 16 mm².

Marking

Marking via miniature WSB and WMB markers or factory direct marking – 745 Series.

Testing

WAGO Kontakttechnik GmbH & Co. KG
Hansastr. 27
32423 Minden
Phone: +49571 887-0 | Fax: +49571 887-169
Email: info.de@wago.com | Web: www.wago.com

Do you have any questions about our products?
We are always happy to take your call at +49 (571) 887-44222.

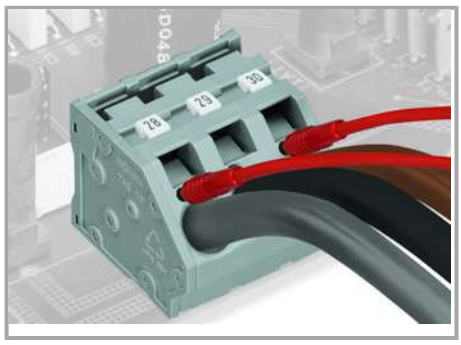

Testing with test plug – 745 Series.

Subject to changes. Please also observe the further product documentation!

WAGO Kontakttechnik GmbH & Co. KG
Hansastr. 27
32423 Minden
Phone: +49571 887-0 | Fax: +49571 887-169
Email: info.de@wago.com | Web: www.wago.com

Do you have any questions about our products?
We are always happy to take your call at +49 (571) 887-44222.