RoHS ✓ Compliant

BOMcheck.net

Color:

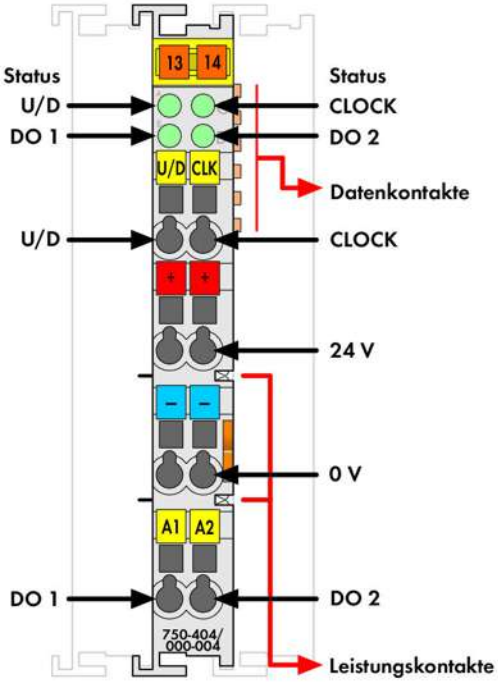

Subject to changes. Please also observe the further product documentation!

WAGO Kontakttechnik GmbH & Co. KG
Hansastr. 27
32423 Minden
Phone: +49571 887-0 | Fax: +49571 887-169
Email: info.de@wago.com | Web: www.wago.com

Do you have any questions about our products?
We are always happy to take your call at +49 (571) 887-44222.

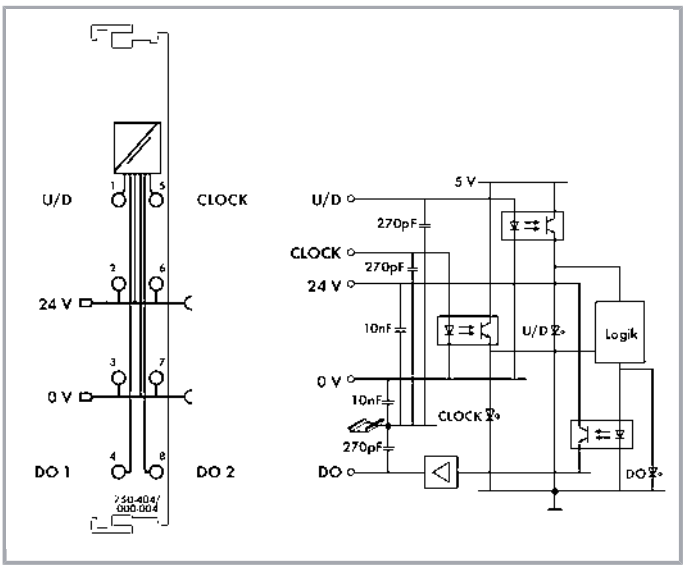

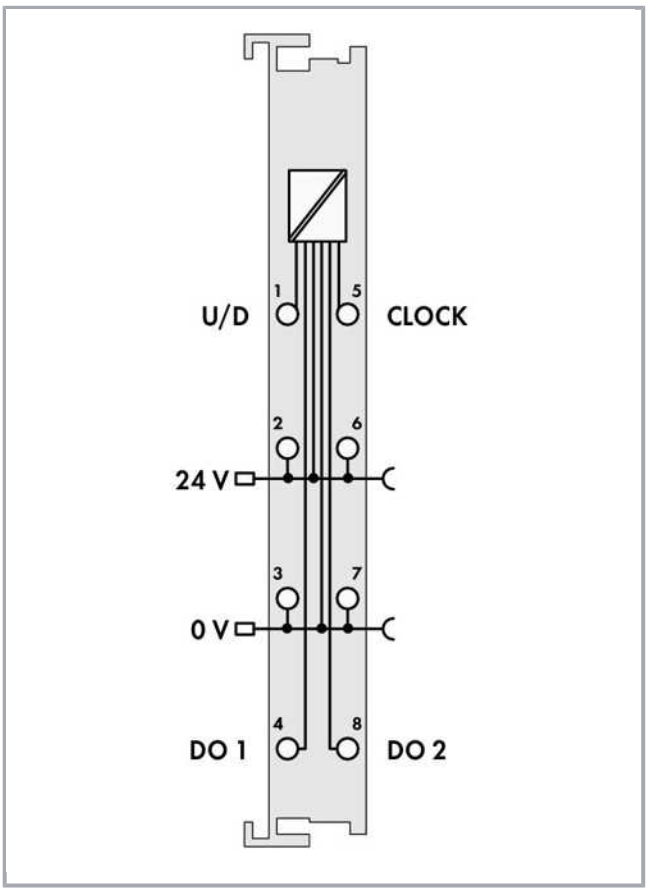

Item description

This counter records 24 V binary pulses and transmits the counter status to the fieldbus system.

The U/D input allows either Up or Down counting.

Digital outputs DO 1 and DO 2 can be activated based on the counter status or via the control byte.

The control byte sets or resets the counter.

A counter lock-out is also possible.

Data

Technical Data

Number of digital outputs	2
No. of counters	1
Type of signal	Voltage
Type of signal voltage	DC 24 V

Subject to changes. Please also observe the further product documentation!

WAGO Kontakttechnik GmbH & Co. KG
Hansastr. 27
32423 Minden
Phone: +49571 887-0 | Fax: +49571 887-169
Email: info.de@wago.com | Web: www.wago.com

Do you have any questions about our products?
We are always happy to take your call at +49 (571) 887-44222.

Counter depth	32 Bit
Input current typ.	6 mA
Output current per channel	0.5 A
Output current	short-circuit-protected
Switching frequency max.	100 kHz
Voltage range for signal (0)	−3 … +5 VDC
Voltage range for signal (1)	15 … 30 VDC
Bit width	32-bit data; 8-bit control/status
System supply voltage	DC 5 V; via data contacts
Current consumption, system supply (5 V)	70 mA
Field supply voltage	DC 24 V (-15 … +20 %); via power jumper contacts (power supply via blade contact; transmission via spring contact)
Isolation	500 V system/field
Number of incoming power jumper contacts	2
Number of outgoing power jumper contacts	2

Connection data

Connection technology: In-/Outputs	8 x CAGE CLAMP®
Connection type (1)	Inputs/Outputs
Solid conductor	0,08 … 2,5 mm² / 28 … 14 AWG
Fine-stranded conductor	0,08 … 2,5 mm² / 28 … 14 AWG
Strip length	8 … 9 mm / 0.31 … 0.35 inch

Geometrical Data

Width	12 mm / 0.472 inch
Height	69,8 mm / 2.748 inch
Height from upper-edge of DIN-35 rail	62,6 mm / 2.465 inch
Depth	100 mm / 3.937 inch

Mechanical data

Type of mounting	DIN-35 rail

Material Data

Color	light gray
Housing material	Polycarbonate, polyamide 6.6
Fire load	1.488 MJ

Subject to changes. Please also observe the further product documentation!

WAGO Kontakttechnik GmbH & Co. KG
Hansastr. 27
32423 Minden
Phone: +49571 887-0 | Fax: +49571 887-169
Email: info.de@wago.com | Web: www.wago.com

Do you have any questions about our products?
We are always happy to take your call at +49 (571) 887-44222.

Weight	50 g
Conformity marking	CE

Environmental Requirements

Surrounding air (operating) temperature	0 … 55 °C
Surrounding air (storage) temperature	-40 … 85 °C
Protection class	IP20
Degree of pollution (5)	2 per IEC 61131-2
Operating altitude	0 … 2000 m
Mounting position	horizontal (standing/lying); vertical
Relative air humidity (no condensation)	95 %
Vibration resistance	4g per IEC 60068-2-6
Shock resistance	15g per IEC 60068-2-27
EMC immunity to interference	per EN 61000-6-2, marine applications
EMC emission of interference	per EN 61000-6-4, marine applications
Exposure to pollutants	Per IEC 60068-2-42 and IEC 60068-2-43
Permissible H_2S contaminant concentration at a relative humidity 75 %	10 ppm
Permissible SO_2 contaminant concentration at a relative humidity 75 %	25 ppm

Commercial data

Product Group	15 (Remote I/O)
Packaging type	BOX
Country of origin	DE
GTIN	4045454429782
Customs Tariff No.	85389099990

Approvals / Certificates

Ex-Approvals

Logo	Approval	Additional Approval Text	Certificate name
PTB 0102 Ex	**ATEX** TUEV Nord Cert GmbH	EN 60079-0	TÜV 07 ATEX 554086 X en.
	TUEV Nord TUEV Nord Cert GmbH	IEC 60079-0	IECEx TUN

Subject to changes. Please also observe the further product documentation!

WAGO Kontakttechnik GmbH & Co. KG
Hansastr. 27
32423 Minden
Phone: +49571 887-0 | Fax: +49571 887-169
Email: info.de@wago.com | Web: www.wago.com

Do you have any questions about our products?
We are always happy to take your call at +49 (571) 887-44222.

IECEx			09.0001 X
UL	UL Underwriters Laboratories Inc. (HAZARDOUS LOCATIONS)	UL 121201	E198726 Sec.1

Country specific Approvals

Logo	Approval	Additional Approval Text	Certificate name
KC	KC National Radio Research Agency	Article 58-2, Clause 3	MSIP-REM-W43-CTM750

Ship Approvals

Logo	Approval	Additional Approval Text	Certificate name
ABS	ABS American Bureau of Shipping	-	19-HG1821926
BV	BV Bureau Veritas S.A.	-	13453/DO BV
DNV GL	DNV GL Det Norske Veritas, Germanischer Lloyd	-	TAA0000194
LR	LR Lloyds Register	-	02/20026 (E6)
NK	NK Nippon Kaiji Kyokai	-	TA17255M
PRS	PRS Polski Rejestr Statków	-	TE/2236/880590/19

Subject to changes. Please also observe the further product documentation!

WAGO Kontakttechnik GmbH & Co. KG
Hansastr. 27
32423 Minden
Phone: +49571 887-0 | Fax: +49571 887-169
Email: info.de@wago.com | Web: www.wago.com

Do you have any questions about our products?
We are always happy to take your call at +49 (571) 887-44222.

	RINA RINA Germany GmbH	-	ELE066419XG

UL-Approvals

Logo	Approval	Additional Approval Text	Certificate name
	UL UL International Netherlands B.V. (ORDINARY LOCATIONS)	UL 508	E175199 Sec.1

Counterpart

Compatible products

Marking accessories

	Item no.: 2009-145 Mini-WSB Inline; for Smart Printer; 1700 pieces on roll; stretchable 5 - 5.2 mm; plain; snap-on type; white	www.wago.com/2009-145
	Item no.: 2009-145/000-002 Mini-WSB Inline; for Smart Printer; 1700 pieces on roll; stretchable 5 - 5.2 mm; plain; snap-on type; white	www.wago.com/2009-145/000-002
	Item no.: 2009-145/000-005 Mini-WSB Inline; for Smart Printer; 1700 pieces on roll; stretchable 5 - 5.2 mm; plain; snap-on type; red	www.wago.com/2009-145/000-005
	Item no.: 2009-145/000-006 Mini-WSB Inline; for Smart Printer; 1700 pieces on roll; stretchable 5 - 5.2 mm; plain; snap-on type; blue	www.wago.com/2009-145/000-006
	Item no.: 2009-145/000-007 Mini-WSB Inline; for Smart Printer; 1700 pieces on roll; stretchable 5 - 5.2 mm; plain; snap-on type; white	www.wago.com/2009-145/000-007
	Item no.: 2009-145/000-012 Mini-WSB Inline; for Smart Printer; 1700 pieces on roll; stretchable 5 - 5.2 mm; plain; snap-on type; orange	www.wago.com/2009-145/000-012
	Item no.: 2009-145/000-023	

Subject to changes. Please also observe the further product documentation!

WAGO Kontakttechnik GmbH & Co. KG
Hansastr. 27
32423 Minden
Phone: +49571 887-0 | Fax: +49571 887-169
Email: info.de@wago.com | Web: www.wago.com

Do you have any questions about our products?
We are always happy to take your call at +49 (571) 887-44222.

	Mini-WSB Inline; for Smart Printer; 1700 pieces on roll; stretchable 5 - 5.2 mm; plain; snap-on type; green	www.wago.com/2009-145/000-023
	Item no.: 2009-145/000-024 Mini-WSB Inline; for Smart Printer; 1700 pieces on roll; stretchable 5 - 5.2 mm; plain; snap-on type; violet	www.wago.com/2009-145/000-024
	Item no.: 248-501 Miniature WSB Quick marking system; plain; Marker width 5 mm; 10 strips with 10 markers per card	www.wago.com/248-501
	Item no.: 248-501/000-002 Mini-WSB marking card; as card; not stretchable; plain; snap-on type; yellow	www.wago.com/248-501/000-002
	Item no.: 248-501/000-005 Mini-WSB marking card; as card; not stretchable; plain; snap-on type; red	www.wago.com/248-501/000-005
	Item no.: 248-501/000-006 Mini-WSB marking card; as card; not stretchable; plain; snap-on type; blue	www.wago.com/248-501/000-006
	Item no.: 248-501/000-007 Mini-WSB marking card; as card; not stretchable; plain; snap-on type; gray	www.wago.com/248-501/000-007
	Item no.: 248-501/000-012 Mini-WSB marking card; as card; not stretchable; plain; snap-on type; orange	www.wago.com/248-501/000-012
	Item no.: 248-501/000-017 Mini-WSB marking card; as card; not stretchable; plain; snap-on type; light green	www.wago.com/248-501/000-017
	Item no.: 248-501/000-023 Mini-WSB marking card; as card; not stretchable; plain; snap-on type; green	www.wago.com/248-501/000-023
	Item no.: 248-501/000-024 Mini-WSB marking card; as card; not stretchable; plain; snap-on type; violet	www.wago.com/248-501/000-024
	Item no.: 750-100 Marker card; as a DIN A4 sheet; plain; white	www.wago.com/750-100
	Item no.: 750-103 Group marker carrier; transparent	www.wago.com/750-103
	Item no.: 750-106 Group marker carrier; transparent	www.wago.com/750-106

Supply module

Subject to changes. Please also observe the further product documentation!

WAGO Kontakttechnik GmbH & Co. KG
Hansastr. 27
32423 Minden
Phone: +49571 887-0 | Fax: +49571 887-169
Email: info.de@wago.com | Web: www.wago.com

Do you have any questions about our products?
We are always happy to take your call at +49 (571) 887-44222.

	Item no.: 750-601 Power Supply; 24 VDC; fuse holder; light gray	www.wago.com/750-601
	Item no.: 750-602 Power Supply; 24 VDC; light gray	www.wago.com/750-602
	Item no.: 750-610 Power Supply; 24 VDC; fuse holder; Diagnostics	www.wago.com/750-610
	Item no.: 750-612 Power Supply; 0 … 230 V AC/DC; light gray	www.wago.com/750-612
system box		
	Item no.: 850-804 IP65 enclosure; Stainless steel; WxHxD (400x123x200 mm); 4 x M20, 16 x M16, 28 x M12 cable grip	www.wago.com/850-804
	Item no.: 850-804/000-001 IP65 enclosure; Stainless steel; WxHxD (400x123x200 mm); 2 x M20, 13 x M16, 32 x M12 cable grip	www.wago.com/850-804/000-001
	Item no.: 850-805 IP65 enclosure; Stainless steel; WxHxD (600x123x200 mm); 4 x M20, 19 x M16, 67 x M12 cable grip	www.wago.com/850-805
	Item no.: 850-814/002-000 IP65 enclosure; Sheet steel (RAL 7035); WxHxD (200x120x200 mm); without flange plate	www.wago.com/850-814/002-000
	Item no.: 850-815/002-000 IP65 enclosure; Sheet steel (RAL 7035); WxHxD (300x120x200 mm); without flange plate	www.wago.com/850-815/002-000
	Item no.: 850-816/002-000 IP65 enclosure; Sheet steel (RAL 7035); WxHxD (400x120x200 mm); without flange plate	www.wago.com/850-816/002-000
	Item no.: 850-817/002-000 IP65 enclosure; Sheet steel (RAL 7035); WxHxD (600x120x200 mm); without flange plate	www.wago.com/850-817/002-000
	Item no.: 850-825 IP65 enclosure; Aluminium (RAL 7032); WxHxD (160x100x160 mm); 9 x M12, 4 x M20	www.wago.com/850-825
	Item no.: 850-826 IP65 enclosure; Aluminium (RAL 7032); WxHxD (240x100x160 mm); 4 x M20, 4 x M16, 14 x M12 cable grip	www.wago.com/850-826
	Item no.: 850-826/002-000 IP65 enclosure; Aluminium (RAL 7035); WxHxD (240x100x160 mm); 4 x M20, 4 x M16, 14 x M12 cable grip	www.wago.com/850-826/002-000
	Item no.: 850-827 IP65 enclosure; Aluminium (RAL 7032); WxHxD (320x100x160 mm); 4 x M20, 8 x M16, 17 x M12 cable grip	www.wago.com/850-827
	Item no.: 850-827/002-000	

Subject to changes. Please also observe the further product documentation!

WAGO Kontakttechnik GmbH & Co. KG
Hansastr. 27
32423 Minden
Phone: +49571 887-0 | Fax: +49571 887-169
Email: info.de@wago.com | Web: www.wago.com

Do you have any questions about our products?
We are always happy to take your call at +49 (571) 887-44222.

	IP65 enclosure; Aluminium (RAL 7035); WxHxD (320x100x160 mm); 4 x M20, 8 x M16, 17 x M12 cable grip	www.wago.com/850-827/002-000
	Item no.: 850-828 IP65 enclosure; Aluminium (RAL 7032); WxHxD (480x100x160 mm); 4 x M20, 10 x M16, 35 x M12 cable grip	www.wago.com/850-828
	Item no.: 850-828/002-000 IP65 enclosure; Aluminium (RAL 7035); WxHxD (480x100x160 mm); 4 x M20, 10 x M16, 35 x M12 cable grip	www.wago.com/850-828/002-000
	Item no.: 850-834 IP65 enclosure; Polyester (RAL 7032); WxHxD (164x100x164 mm); 9 x M12, 4 x M20	www.wago.com/850-834
	Item no.: 850-835 IP65 enclosure; Polyester (RAL 7032); WxHxD (244x100x164 mm); 4 x M20, 4 x M16, 14 x M12 cable grip	www.wago.com/850-835
	Item no.: 850-836 IP65 enclosure; Polyester (RAL 7032); WxHxD (324x100x164 mm); 4 x M20, 8 x M16, 17 x M12 cable grip	www.wago.com/850-836
shield connection		
	Item no.: 790-108 Shield clamping saddle; 11 mm wide; diameter of compatible conductor; 3 ... 8 mm	www.wago.com/790-108
	Item no.: 790-116 Shield clamping saddle; 19 mm wide; diameter of compatible conductor; 7 ... 16 mm	www.wago.com/790-116
	Item no.: 790-124 Shield clamping saddle; 27 mm wide; diameter of compatible conductor; 6 ... 24 mm	www.wago.com/790-124
	Item no.: 790-140 Shield clamping saddle; diameter of compatible conductor	www.wago.com/790-140
	Item no.: 790-208 Shield clamping saddle; 12.4 mm wide; 3 ... 8 mm	www.wago.com/790-208
	Item no.: 790-216 Shield clamping saddle; 21.8 mm wide; 6 ... 16 mm	www.wago.com/790-216
	Item no.: 790-220 Shield clamping saddle; 30 mm wide; 6 ... 20 mm	www.wago.com/790-220
Carrier rail		
	Item no.: 210-112 Steel carrier rail; 35 x 7.5 mm; 1 mm thick; 2 m long; slotted; according to EN 60715; "Hole width 25 mm	www.wago.com/210-112
	Item no.: 210-113 Steel carrier rail; 35 x 7.5 mm; 1 mm thick; 2 m long; unslotted; according to EN 60715	www.wago.com/210-113
	Item no.: 210-114 Steel carrier rail; 35 x 15 mm; 1.5 mm thick; 2 m long; unslotted; similar to EN 60715	www.wago.com/210-114
	Item no.: 210-115	

Subject to changes. Please also observe the further product documentation!

WAGO Kontakttechnik GmbH & Co. KG
Hansastr. 27
32423 Minden
Phone: +49571 887-0 | Fax: +49571 887-169
Email: info.de@wago.com | Web: www.wago.com

Do you have any questions about our products?
We are always happy to take your call at +49 (571) 887-44222.

	Steel carrier rail; 35 x 7.5 mm; 1 mm thick; 2 m long; slotted; according to EN 60715; "Hole width 18 mm	www.wago.com/210-115
	Item no.: 210-118 Steel carrier rail; 35 x 15 mm; 2.3 mm thick; 2 m long; unslotted; according to EN 60715	www.wago.com/210-118
	Item no.: 210-196 Aluminum carrier rail; 35 x 8.2 mm; 1.6 mm thick; 2 m long; unslotted; similar to EN 60715; silver-colored	www.wago.com/210-196
	Item no.: 210-197 Steel carrier rail; 35 x 15 mm; 1.5 mm thick; 2 m long; slotted; similar to EN 60715	www.wago.com/210-197
	Item no.: 210-198 Copper carrier rail; 35 x 15 mm; 2.3 mm thick; 2 m long; unslotted; according to EN 60715; copper-colored	www.wago.com/210-198
	Item no.: 210-504 Steel carrier rail; 35 x 7.5 mm; 1 mm thick; 2 m long; slotted; galvanized; according to EN 60715	www.wago.com/210-504
	Item no.: 210-505 Steel carrier rail; 35 x 7.5 mm; 1 mm thick; 2 m long; unslotted; galvanized; according to EN 60715	www.wago.com/210-505
	Item no.: 210-506 Steel carrier rail; 35 x 15 mm; 1.5 mm thick; 2 m long; unslotted; galvanized; similar to EN 60715	www.wago.com/210-506
	Item no.: 210-508 Steel carrier rail; 35 x 15 mm; 1.5 mm thick; 2 m long; slotted; galvanized; similar to EN 60715	www.wago.com/210-508

Downloads

Documentation

Manual

Up/Down counter 24VDC, 100kHz	V 1.1.2	pdf 543.5 kB	Download

Bid Text

750-404/000-004 X81 - Datei	Feb 19, 2019	xml 4.3 kB	Download
750-404/000-004 doc - Datei	Oct 9, 2017	doc 24.6 kB	Download

Additional Information

Disposal; Electrical and electronic equipment, Packaging	V 1.0.0	pdf 265.8 kB	Download

System Description

Subject to changes. Please also observe the further product documentation!

WAGO Kontakttechnik GmbH & Co. KG
Hansastr. 27
32423 Minden
Phone: +49571 887-0 | Fax: +49571 887-169
Email: info.de@wago.com | Web: www.wago.com

Do you have any questions about our products?
We are always happy to take your call at +49 (571) 887-44222.

750/753 Series I/O-System – General Product Information		pdf 1.7 MB	Download
Overview on WAGO-I/O-SYSTEM 750 approvals		pdf 780.2 kB	Download
Use in Hazardous Environments Term definition, marking and installation regulations	V 1.0.0	pdf 1.0 MB	Download
Design Notes Basic conditions and recommendations for higher operational safety	V 2.0.0	pdf 1.5 MB	Download

CAD/CAE-Data

CAD data

2D/3D Models 750-404/000-004	URL	Download

CAE data

EPLAN Data Portal 750-404/000-004	URL	Download
WSCAD Universe 750-404/000-004	URL	Download

Device Files

Device Driver

WAGO USB Service Kabel Treiber / Serie 750 und 857	6.5.3.0 Sep 10, 2014	zip 4.8 MB	Download

Installation Notes

Product family

750/753 Series – I/O System
Show all products from the family

WAGO Kontakttechnik GmbH & Co. KG
Hansastr. 27
32423 Minden
Phone: +49571 887-0 | Fax: +49571 887-169
Email: info.de@wago.com | Web: www.wago.com

Do you have any questions about our products?
We are always happy to take your call at +49 (571) 887-44222.