2-channel digital input; 24 VDC; 0.2 ms; Proximity switch; light gray

www.wago.com/750-411

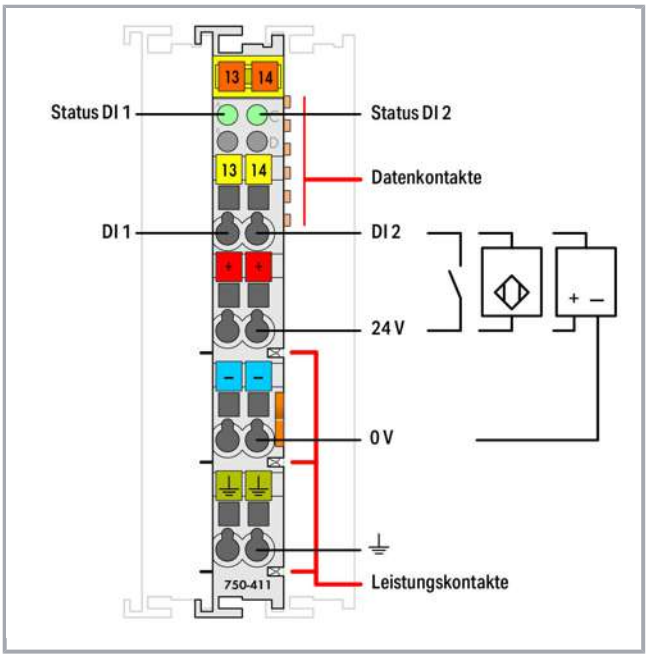

Subject to changes. Please also observe the further product documentation!

WAGO Kontakttechnik GmbH & Co. KG
Hansastr. 27
32423 Minden
Phone: +49571 887-0 | Fax: +49571 887-169
Email: info.de@wago.com | Web: www.wago.com

Do you have any questions about our products?
We are always happy to take your call at +49 (571) 887-44222.

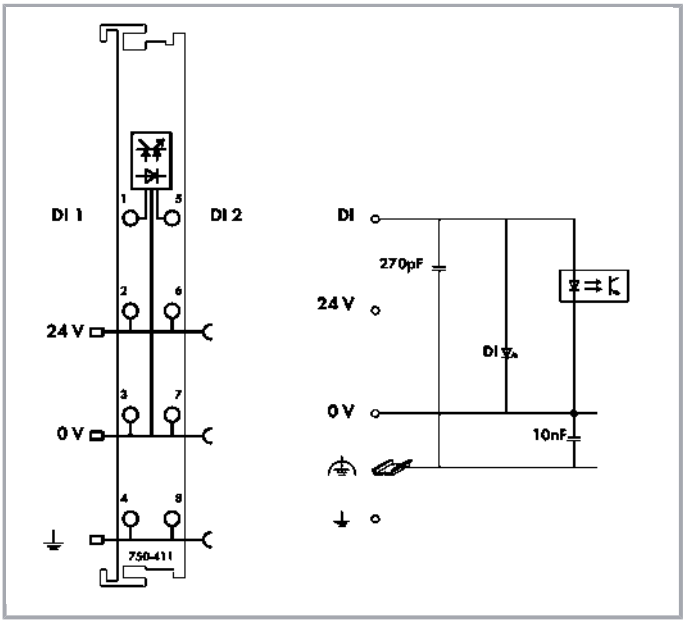

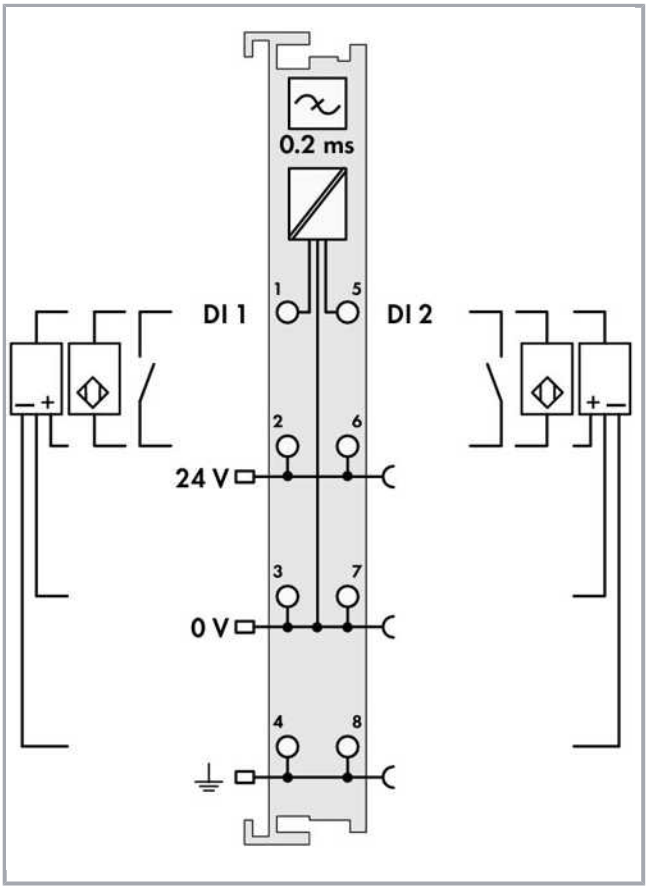

Item description

This digital input module receives control signals from field devices (e.g., sensors).

Each input module has a noise-rejection filter.

Field and system levels are electrically isolated.

A 2-wire proximity sensor can be connected to this module.

Data

Technical Data

Number of digital inputs	2
Total number of channels (module)	2
Type of signal	Voltage
Type of signal voltage	DC 24 V
Sensor supply voltage	DC 24 V

Subject to changes. Please also observe the further product documentation!

WAGO Kontakttechnik GmbH & Co. KG
Hansastr. 27
32423 Minden
Phone: +49571 887-0 | Fax: +49571 887-169
Email: info.de@wago.com | Web: www.wago.com

Do you have any questions about our products?
We are always happy to take your call at +49 (571) 887-44222.

Sensor connection	2 x (2-wire, 3-wire, 4-wire); 2-wire proximity switch
Input characteristic	high-side switching
Input filter (digital)	0.2 ms
Input current per channel for signal (1) typ.	8 mA
Voltage range for signal (0)	−3 … +5 VDC
Voltage range for signal (1)	15 … 30 VDC
Max input data width (internal)	2 Bit
System supply voltage	DC 5 V; via data contacts
Current consumption, system supply (5 V)	2.5 mA
Field supply voltage	DC 24 V (-25 … +30 %); via power jumper contacts (power supply via blade contact; transmission via spring contact)
Isolation	500 V system/field
Indicators	LED (A, C) green: Status DI 1, DI 2
Number of incoming power jumper contacts	3
Number of outgoing power jumper contacts	3
Current carrying capacity of the power jumper contacts	10 A

Connection data

Connection technology: In-/Outputs	8 x CAGE CLAMP®
Connection type (1)	Inputs/Outputs
Solid conductor	0,08 … 2,5 mm² / 28 … 14 AWG
Fine-stranded conductor	0,08 … 2,5 mm² / 28 … 14 AWG
Strip length	8 … 9 mm / 0.31 … 0.35 inch

Geometrical Data

Width	12 mm / 0.472 inch
Height	69,8 mm / 2.748 inch
Height from upper-edge of DIN-35 rail	62,6 mm / 2.465 inch
Depth	100 mm / 3.937 inch

Mechanical data

Type of mounting	DIN-35 rail

Material Data

Color	light gray
Housing material	Polycarbonate, polyamide 6.6

Subject to changes. Please also observe the further product documentation!

WAGO Kontakttechnik GmbH & Co. KG
Hansastr. 27
32423 Minden
Phone: +49571 887-0 | Fax: +49571 887-169
Email: info.de@wago.com | Web: www.wago.com

Do you have any questions about our products?
We are always happy to take your call at +49 (571) 887-44222.

Fire load	1.491 MJ
Weight	46.5 g
Conformity marking	CE

Environmental Requirements

Surrounding air (operating) temperature	0 … 55 °C
Surrounding air (storage) temperature	-40 … 85 °C
Protection class	IP20
Degree of pollution (5)	2 per IEC 61131-2
Operating altitude	0 … 2000 m
Mounting position	horizontal (standing/lying); vertical
Relative air humidity (no condensation)	95 %
Vibration resistance	4g per IEC 60068-2-6
Shock resistance	15g per IEC 60068-2-27
EMC immunity to interference	per EN 61000-6-2, marine applications
EMC emission of interference	per EN 61000-6-4, marine applications
Exposure to pollutants	Per IEC 60068-2-42 and IEC 60068-2-43
Permissible H_2S contaminant concentration at a relative humidity 75 %	10 ppm
Permissible SO_2 contaminant concentration at a relative humidity 75 %	25 ppm

Commercial data

Product Group	15 (Remote I/O)
Packaging type	BOX
Country of origin	DE
GTIN	4045454392789
Customs Tariff No.	85389099990

Approvals / Certificates

Ex-Approvals

Logo	Approval	Additional Approval Text	Certificate name
	ATEX TUEV Nord Cert GmbH	EN 60079-0	TÜV 07 ATEX 554086 X en.
	TUEV Nord	IEC 60079-0	IECEx

Subject to changes. Please also observe the further product documentation!

WAGO Kontakttechnik GmbH & Co. KG
Hansastr. 27
32423 Minden
Phone: +49571 887-0 | Fax: +49571 887-169
Email: info.de@wago.com | Web: www.wago.com

Do you have any questions about our products?
We are always happy to take your call at +49 (571) 887-44222.

IECEx	TUEV Nord Cert GmbH		TUN 09.0001 X
UL	**UL** Underwriters Laboratories Inc. (HAZARDOUS LOCATIONS)	UL 121201	E198726 Sec.1

Country specific Approvals

Logo	Approval	Additional Approval Text	Certificate name
KC	**KC** National Radio Research Agency	Article 58-2, Clause 3	MSIP-REM-W43-DIM750

Ship Approvals

Logo	Approval	Additional Approval Text	Certificate name
ABS	**ABS** American Bureau of Shipping	-	19-HG1821926
BV	**BV** Bureau Veritas S.A.	-	13453/DO BV
DNV GL	**DNV GL** Det Norske Veritas, Germanischer Lloyd	-	TAA0000194
KR	**KR** Korean Register of Shipping	-	KR HMB05880-AC001
LR	**LR** Lloyds Register	-	02/20026 (E6)
NK	**NK** Nippon Kaiji Kyokai	-	TA17255M

Subject to changes. Please also observe the further product documentation!

WAGO Kontakttechnik GmbH & Co. KG
Hansastr. 27
32423 Minden
Phone: +49571 887-0 | Fax: +49571 887-169
Email: info.de@wago.com | Web: www.wago.com

Do you have any questions about our products?
We are always happy to take your call at +49 (571) 887-44222.

	PRS Polski Rejestr Statków	-	TE/2236 /880590/19
	RINA RINA Germany GmbH	-	ELE066419XG

UL-Approvals

Logo	Approval	Additional Approval Text	Certificate name
	UL UL International Netherlands B.V. (ORDINARY LOCATIONS)	UL 508	E175199 Sec.1

Counterpart

Compatible products

Supply module

	Item no.: 750-601 Power Supply; 24 VDC; fuse holder; light gray	www.wago.com/750-601
	Item no.: 750-602 Power Supply; 24 VDC; light gray	www.wago.com/750-602
	Item no.: 750-610 Power Supply; 24 VDC; fuse holder; Diagnostics	www.wago.com/750-610
	Item no.: 750-612 Power Supply; 0 … 230 V AC/DC; light gray	www.wago.com/750-612

shield connection

	Item no.: 790-108 Shield clamping saddle; 11 mm wide; diameter of compatible conductor; 3 … 8 mm	www.wago.com/790-108
	Item no.: 790-116 Shield clamping saddle; 19 mm wide; diameter of compatible conductor; 7 … 16 mm	www.wago.com/790-116

Subject to changes. Please also observe the further product documentation!

WAGO Kontakttechnik GmbH & Co. KG
Hansastr. 27
32423 Minden
Phone: +49571 887-0 | Fax: +49571 887-169
Email: info.de@wago.com | Web: www.wago.com

Do you have any questions about our products?
We are always happy to take your call at +49 (571) 887-44222.

	Item no.: 790-124 Shield clamping saddle; 27 mm wide; diameter of compatible conductor; 6 … 24 mm	www.wago.com/790-124
	Item no.: 790-140 Shield clamping saddle; diameter of compatible conductor	www.wago.com/790-140
	Item no.: 790-208 Shield clamping saddle; 12.4 mm wide; 3 … 8 mm	www.wago.com/790-208
	Item no.: 790-216 Shield clamping saddle; 21.8 mm wide; 6 … 16 mm	www.wago.com/790-216
	Item no.: 790-220 Shield clamping saddle; 30 mm wide; 6 … 20 mm	www.wago.com/790-220
system box		
	Item no.: 850-804 IP65 enclosure; Stainless steel; WxHxD (400x123x200 mm); 4 x M20, 16 x M16, 28 x M12 cable grip	www.wago.com/850-804
	Item no.: 850-804/000-001 IP65 enclosure; Stainless steel; WxHxD (400x123x200 mm); 2 x M20, 13 x M16, 32 x M12 cable grip	www.wago.com/850-804/000-001
	Item no.: 850-805 IP65 enclosure; Stainless steel; WxHxD (600x123x200 mm); 4 x M20, 19 x M16, 67 x M12 cable grip	www.wago.com/850-805
	Item no.: 850-814/002-000 IP65 enclosure; Sheet steel (RAL 7035); WxHxD (200x120x200 mm); without flange plate	www.wago.com/850-814/002-000
	Item no.: 850-815/002-000 IP65 enclosure; Sheet steel (RAL 7035); WxHxD (300x120x200 mm); without flange plate	www.wago.com/850-815/002-000
	Item no.: 850-816/002-000 IP65 enclosure; Sheet steel (RAL 7035); WxHxD (400x120x200 mm); without flange plate	www.wago.com/850-816/002-000
	Item no.: 850-817/002-000 IP65 enclosure; Sheet steel (RAL 7035); WxHxD (600x120x200 mm); without flange plate	www.wago.com/850-817/002-000
	Item no.: 850-825 IP65 enclosure; Aluminium (RAL 7032); WxHxD (160x100x160 mm); 9 x M12, 4 x M20	www.wago.com/850-825
	Item no.: 850-826 IP65 enclosure; Aluminium (RAL 7032); WxHxD (240x100x160 mm); 4 x M20, 4 x M16, 14 x M12 cable grip	www.wago.com/850-826
	Item no.: 850-826/002-000 IP65 enclosure; Aluminium (RAL 7035); WxHxD (240x100x160 mm); 4 x M20, 4 x M16, 14 x M12 cable grip	www.wago.com/850-826/002-000
	Item no.: 850-827	

Subject to changes. Please also observe the further product documentation!

WAGO Kontakttechnik GmbH & Co. KG
Hansastr. 27
32423 Minden
Phone: +49571 887-0 | Fax: +49571 887-169
Email: info.de@wago.com | Web: www.wago.com

Do you have any questions about our products?
We are always happy to take your call at +49 (571) 887-44222.

	IP65 enclosure; Aluminium (RAL 7032); WxHxD (320x100x160 mm); 4 x M20, 8 x M16, 17 x M12 cable grip	www.wago.com/850-827
	Item no.: 850-827/002-000 IP65 enclosure; Aluminium (RAL 7035); WxHxD (320x100x160 mm); 4 x M20, 8 x M16, 17 x M12 cable grip	www.wago.com/850-827/002-000
	Item no.: 850-828 IP65 enclosure; Aluminium (RAL 7032); WxHxD (480x100x160 mm); 4 x M20, 10 x M16, 35 x M12 cable grip	www.wago.com/850-828
	Item no.: 850-828/002-000 IP65 enclosure; Aluminium (RAL 7035); WxHxD (480x100x160 mm); 4 x M20, 10 x M16, 35 x M12 cable grip	www.wago.com/850-828/002-000
	Item no.: 850-834 IP65 enclosure; Polyester (RAL 7032); WxHxD (164x100x164 mm); 9 x M12, 4 x M20	www.wago.com/850-834
	Item no.: 850-835 IP65 enclosure; Polyester (RAL 7032); WxHxD (244x100x164 mm); 4 x M20, 4 x M16, 14 x M12 cable grip	www.wago.com/850-835
	Item no.: 850-836 IP65 enclosure; Polyester (RAL 7032); WxHxD (324x100x164 mm); 4 x M20, 8 x M16, 17 x M12 cable grip	www.wago.com/850-836

Marking accessories

	Item no.: 2009-145 Mini-WSB Inline; for Smart Printer; 1700 pieces on roll; stretchable 5 - 5.2 mm; plain; snap-on type; white	www.wago.com/2009-145
	Item no.: 2009-145/000-002 Mini-WSB Inline; for Smart Printer; 1700 pieces on roll; stretchable 5 - 5.2 mm; plain; snap-on type; white	www.wago.com/2009-145/000-002
	Item no.: 2009-145/000-005 Mini-WSB Inline; for Smart Printer; 1700 pieces on roll; stretchable 5 - 5.2 mm; plain; snap-on type; red	www.wago.com/2009-145/000-005
	Item no.: 2009-145/000-006 Mini-WSB Inline; for Smart Printer; 1700 pieces on roll; stretchable 5 - 5.2 mm; plain; snap-on type; blue	www.wago.com/2009-145/000-006
	Item no.: 2009-145/000-007 Mini-WSB Inline; for Smart Printer; 1700 pieces on roll; stretchable 5 - 5.2 mm; plain; snap-on type; white	www.wago.com/2009-145/000-007
	Item no.: 2009-145/000-012 Mini-WSB Inline; for Smart Printer; 1700 pieces on roll; stretchable 5 - 5.2 mm; plain; snap-on type; orange	www.wago.com/2009-145/000-012
	Item no.: 2009-145/000-023 Mini-WSB Inline; for Smart Printer; 1700 pieces on roll; stretchable 5 - 5.2 mm; plain; snap-on type; green	www.wago.com/2009-145/000-023
	Item no.: 2009-145/000-024	

WAGO Kontakttechnik GmbH & Co. KG
Hansastr. 27
32423 Minden
Phone: +49571 887-0 | Fax: +49571 887-169
Email: info.de@wago.com | Web: www.wago.com

Do you have any questions about our products?
We are always happy to take your call at +49 (571) 887-44222.

	Mini-WSB Inline; for Smart Printer; 1700 pieces on roll; stretchable 5 - 5.2 mm; plain; snap-on type; violet	www.wago.com/2009-145/000-024
	Item no.: 248-501 Miniature WSB Quick marking system; plain; Marker width 5 mm; 10 strips with 10 markers per card	www.wago.com/248-501
	Item no.: 248-501/000-002 Mini-WSB marking card; as card; not stretchable; plain; snap-on type; yellow	www.wago.com/248-501/000-002
	Item no.: 248-501/000-005 Mini-WSB marking card; as card; not stretchable; plain; snap-on type; red	www.wago.com/248-501/000-005
	Item no.: 248-501/000-006 Mini-WSB marking card; as card; not stretchable; plain; snap-on type; blue	www.wago.com/248-501/000-006
	Item no.: 248-501/000-007 Mini-WSB marking card; as card; not stretchable; plain; snap-on type; gray	www.wago.com/248-501/000-007
	Item no.: 248-501/000-012 Mini-WSB marking card; as card; not stretchable; plain; snap-on type; orange	www.wago.com/248-501/000-012
	Item no.: 248-501/000-017 Mini-WSB marking card; as card; not stretchable; plain; snap-on type; light green	www.wago.com/248-501/000-017
	Item no.: 248-501/000-023 Mini-WSB marking card; as card; not stretchable; plain; snap-on type; green	www.wago.com/248-501/000-023
	Item no.: 248-501/000-024 Mini-WSB marking card; as card; not stretchable; plain; snap-on type; violet	www.wago.com/248-501/000-024
	Item no.: 750-100 Marker card; as a DIN A4 sheet; plain; white	www.wago.com/750-100
	Item no.: 750-103 Group marker carrier; transparent	www.wago.com/750-103
	Item no.: 750-106 Group marker carrier; transparent	www.wago.com/750-106

Carrier rail

	Item no.: 210-112 Steel carrier rail; 35 x 7.5 mm; 1 mm thick; 2 m long; slotted; according to EN 60715; "Hole width 25 mm	www.wago.com/210-112
	Item no.: 210-113	

Subject to changes. Please also observe the further product documentation!

WAGO Kontakttechnik GmbH & Co. KG
Hansastr. 27
32423 Minden
Phone: +49571 887-0 | Fax: +49571 887-169
Email: info.de@wago.com | Web: www.wago.com

Do you have any questions about our products?
We are always happy to take your call at +49 (571) 887-44222.

	Steel carrier rail; 35 x 7.5 mm; 1 mm thick; 2 m long; unslotted; according to EN 60715	www.wago.com/210-113
	Item no.: 210-114 Steel carrier rail; 35 x 15 mm; 1.5 mm thick; 2 m long; unslotted; similar to EN 60715	www.wago.com/210-114
	Item no.: 210-115 Steel carrier rail; 35 x 7.5 mm; 1 mm thick; 2 m long; slotted; according to EN 60715; "Hole width 18 mm	www.wago.com/210-115
	Item no.: 210-118 Steel carrier rail; 35 x 15 mm; 2.3 mm thick; 2 m long; unslotted; according to EN 60715	www.wago.com/210-118
	Item no.: 210-196 Aluminum carrier rail; 35 x 8.2 mm; 1.6 mm thick; 2 m long; unslotted; similar to EN 60715; silver-colored	www.wago.com/210-196
	Item no.: 210-197 Steel carrier rail; 35 x 15 mm; 1.5 mm thick; 2 m long; slotted; similar to EN 60715	www.wago.com/210-197
	Item no.: 210-198 Copper carrier rail; 35 x 15 mm; 2.3 mm thick; 2 m long; unslotted; according to EN 60715; copper-colored	www.wago.com/210-198
	Item no.: 210-504 Steel carrier rail; 35 x 7.5 mm; 1 mm thick; 2 m long; slotted; galvanized; according to EN 60715	www.wago.com/210-504
	Item no.: 210-505 Steel carrier rail; 35 x 7.5 mm; 1 mm thick; 2 m long; unslotted; galvanized; according to EN 60715	www.wago.com/210-505
	Item no.: 210-506 Steel carrier rail; 35 x 15 mm; 1.5 mm thick; 2 m long; unslotted; galvanized; similar to EN 60715	www.wago.com/210-506
	Item no.: 210-508 Steel carrier rail; 35 x 15 mm; 1.5 mm thick; 2 m long; slotted; galvanized; similar to EN 60715	www.wago.com/210-508

Downloads

Documentation

Manual

2-channel, 24VDC, 0.2ms Proximity switch, 2- to 4-wire connection; high-side switching	V 1.1.0	pdf 2.0 MB	Download

Bid Text

750-411 GAEB X81 - Datei	Feb 19, 2019	xml 4.3 kB	Download
750-411 doc - Datei	Jul 12, 2017	doc 25.6 kB	Download

Additional Information

Subject to changes. Please also observe the further product documentation!

WAGO Kontakttechnik GmbH & Co. KG
Hansastr. 27
32423 Minden
Phone: +49571 887-0 | Fax: +49571 887-169
Email: info.de@wago.com | Web: www.wago.com

Do you have any questions about our products?
We are always happy to take your call at +49 (571) 887-44222.

Disposal; Electrical and electronic equipment, Packaging	V 1.0.0	pdf 265.8 kB	Download

System Description

Overview on WAGO-I/O-SYSTEM 750 approvals		pdf 780.2 kB	Download
Design Notes Basic conditions and recommendations for higher operational safety	V 2.0.0	pdf 1.5 MB	Download
750/753 Series I/O-System – General Product Information		pdf 1.7 MB	Download
Use in Hazardous Environments Term definition, marking and installation regulations	V 1.0.0	pdf 1.0 MB	Download

CAD/CAE-Data

CAD data

2D/3D Models 750-411		URL	Download

CAE data

EPLAN Data Portal 750-411		URL	Download
WSCAD Universe 750-411		URL	Download

Device Files

Device Driver

WAGO USB Service Kabel Treiber / Serie 750 und 857	6.5.3.0 Sep 10, 2014	zip 4.8 MB	Download

Installation Notes

WAGO Kontakttechnik GmbH & Co. KG
Hansastr. 27
32423 Minden
Phone: +49571 887-0 | Fax: +49571 887-169
Email: info.de@wago.com | Web: www.wago.com

Product family

750/753 Series – I/O System
Show all products from the family

Subject to changes. Please also observe the further product documentation!

WAGO Kontakttechnik GmbH & Co. KG
Hansastr. 27
32423 Minden
Phone: +49571 887-0 | Fax: +49571 887-169
Email: info.de@wago.com | Web: www.wago.com

Do you have any questions about our products?
We are always happy to take your call at +49 (571) 887-44222.