Data sheet | Item number: 750-506/000-800

2-channel digital output; 24 VDC; 0.5 A; Interference-free; Diagnostics; light gray

www.wago.com/750-506_000-800

RoHS Compliant ✓ BOMcheck.net Color:

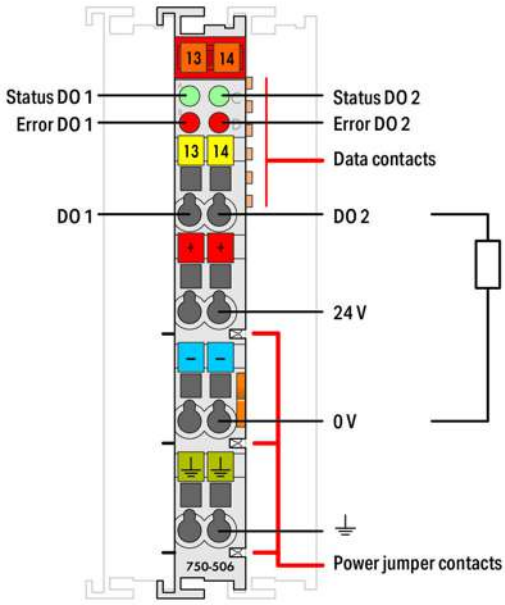

Subject to changes. Please also observe the further product documentation!

WAGO Kontakttechnik GmbH & Co. KG
Hansastr. 27
32423 Minden
Phone: +49571 887-0 | Fax: +49571 887-169
Email: info.de@wago.com | Web: www.wago.com

Do you have any questions about our products?
We are always happy to take your call at +49 (571) 887-44222.

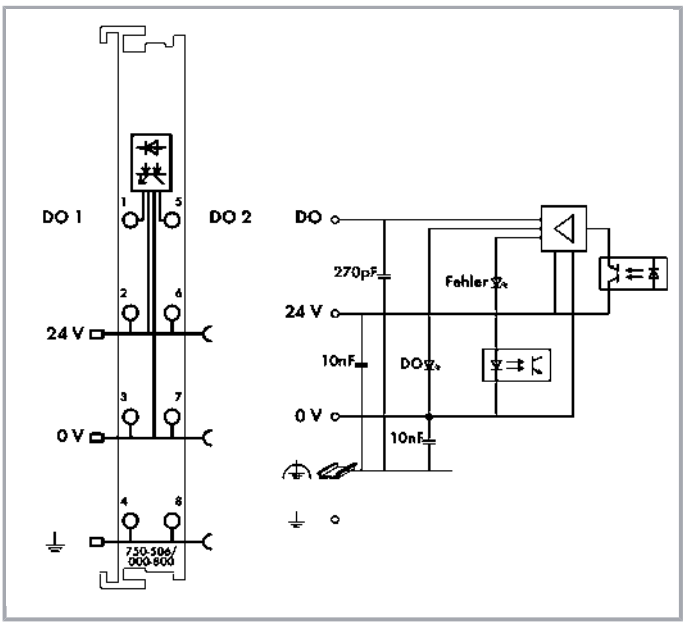

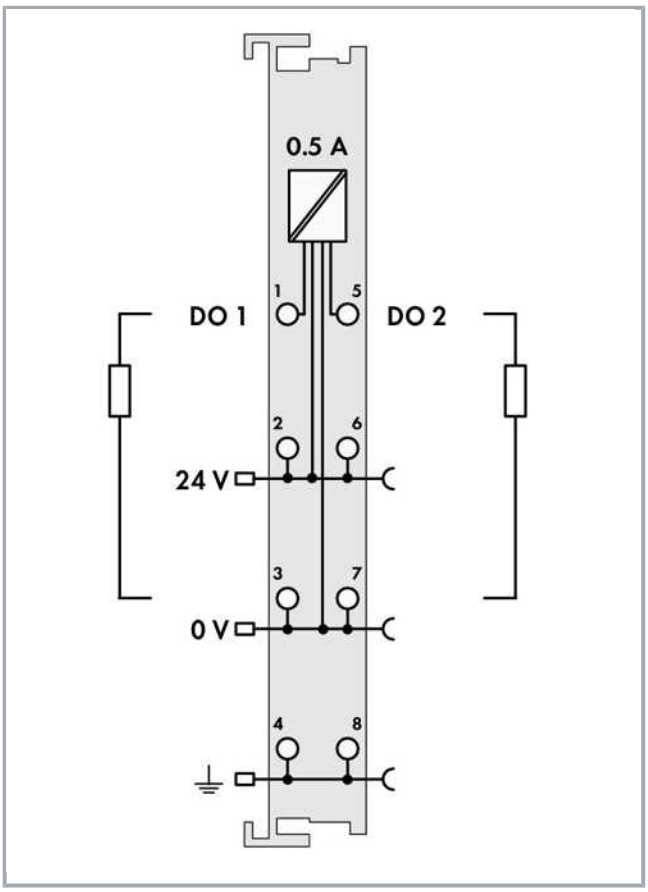

Item description

This digital output module transmits control signals from the automation device to the connected actuators.

All outputs are short-circuit-protected.

The module detects the following errors: overload, short circuit and wire break.

The status is transmitted to the fieldbus coupler and indicated by LEDs.

Field and system levels are electrically isolated.

Data

Technical Data

Number of digital outputs	2
Total number of channels (module)	2
Type of signal	Voltage
Type of signal voltage	DC 24 V

Subject to changes. Please also observe the further product documentation!

WAGO Kontakttechnik GmbH & Co. KG
Hansastr. 27
32423 Minden
Phone: +49571 887-0 | Fax: +49571 887-169
Email: info.de@wago.com | Web: www.wago.com

Do you have any questions about our products?
We are always happy to take your call at +49 (571) 887-44222.

Actuator connection	2 x (2-wire, 3-wire, 4-wire)
Output characteristic	high-side switching
Output current per channel	0.5 A
Output current	short-circuit-protected
Switching frequency max.	5 kHz
Type of load	Resistive, inductive, lamp load
Diagnostics	Open circuit, overload and short circuit
Reverse voltage protection	No
Open-circuit detection	9.5 mA
Short-circuit limitation typ. Pwm	1.5 A
Inductive load switch-off energy dissipation W (max.)	0.2 J
Max input data width (internal)	2 Bit
Max output data width (internal)	2 Bit
System supply voltage	DC 5 V; via data contacts
Current consumption, system supply (5 V)	15 mA
Field supply voltage	DC 24 V (-15 … +20 %); via power jumper contacts (power supply via blade contact; transmission via spring contact)
Current consumption, field supply (module with no external load)	15 mA
Isolation	500 V system/field
Interference-free for safety function applications	Yes
Indicators	LED (A, C) green: Status DO 1, DO 2; LED (B, D) red: Error DO 1, DO 2
Number of incoming power jumper contacts	3
Number of outgoing power jumper contacts	3
Current carrying capacity of the power jumper contacts	10 A

Connection data

Connection technology: In-/Outputs	8 x CAGE CLAMP®
Connection type (1)	Inputs/Outputs
Solid conductor	0,08 … 2,5 mm² / 28 … 14 AWG
Fine-stranded conductor	0,08 … 2,5 mm² / 28 … 14 AWG
Strip length	8 … 9 mm / 0.31 … 0.35 inch

Geometrical Data

Width	12 mm / 0.472 inch
Height	69,8 mm / 2.748 inch
Height from upper-edge of DIN-35 rail	62,6 mm / 2.465 inch
Depth	100 mm / 3.937 inch

Subject to changes. Please also observe the further product documentation!

WAGO Kontakttechnik GmbH & Co. KG
Hansastr. 27
32423 Minden
Phone: +49571 887-0 | Fax: +49571 887-169
Email: info.de@wago.com | Web: www.wago.com

Do you have any questions about our products?
We are always happy to take your call at +49 (571) 887-44222.

Mechanical data

Type of mounting	DIN-35 rail

Material Data

Color	light gray
Housing material	Polycarbonate, polyamide 6.6
Fire load	1.378 MJ
Weight	48 g
Conformity marking	CE

Environmental Requirements

Surrounding air (operating) temperature	0 … 55 °C
Surrounding air (storage) temperature	-40 … 85 °C
Protection class	IP20
Degree of pollution (5)	2 per IEC 61131-2
Operating altitude	0 … 2000 m
Mounting position	horizontal (standing/lying); vertical
Relative air humidity (no condensation)	95 %
Vibration resistance	per IEC 60068-2-6
Shock resistance	15g per IEC 60068-2-27
EMC immunity to interference	per EN 61000-6-2
EMC emission of interference	per EN 61000-6-4
Exposure to pollutants	Per IEC 60068-2-42 and IEC 60068-2-43
Permissible H_2S contaminant concentration at a relative humidity 75 %	10 ppm
Permissible SO_2 contaminant concentration at a relative humidity 75 %	25 ppm

Commercial data

Product Group	15 (Remote I/O)
Packaging type	BOX
Country of origin	DE
GTIN	4045454870423
Customs Tariff No.	85371098990

Approvals / Certificates

Subject to changes. Please also observe the further product documentation!

WAGO Kontakttechnik GmbH & Co. KG
Hansastr. 27
32423 Minden
Phone: +49571 887-0 | Fax: +49571 887-169
Email: info.de@wago.com | Web: www.wago.com

Do you have any questions about our products?
We are always happy to take your call at +49 (571) 887-44222.

Ex-Approvals

Logo	Approval	Additional Approval Text	Certificate name
	ATEX TUEV Nord Cert GmbH	EN 60079-0	TÜV 07 ATEX 554086 X en.
	TUEV Nord TUEV Nord Cert GmbH	IEC 60079-0	IECEx TUN 09.0001 X
	UL Underwriters Laboratories Inc. (HAZARDOUS LOCATIONS)	UL 121201	E198726 Sec.1

Country specific Approvals

Logo	Approval	Additional Approval Text	Certificate name
	KC National Radio Research Agency	Article 58-2, Clause 3	MSIP-REM-W43-DOM750

UL-Approvals

Logo	Approval	Additional Approval Text	Certificate name
	UL UL International Netherlands B.V. (ORDINARY LOCATIONS)	UL 508	E175199 Sec.1

Counterpart

Compatible products

Carrier rail

Subject to changes. Please also observe the further product documentation!

WAGO Kontakttechnik GmbH & Co. KG
Hansastr. 27
32423 Minden
Phone: +49571 887-0 | Fax: +49571 887-169
Email: info.de@wago.com | Web: www.wago.com

Do you have any questions about our products?
We are always happy to take your call at +49 (571) 887-44222.

	Item no.: 210-112 Steel carrier rail; 35 x 7.5 mm; 1 mm thick; 2 m long; slotted; according to EN 60715; "Hole width 25 mm	www.wago.com/210-112
	Item no.: 210-113 Steel carrier rail; 35 x 7.5 mm; 1 mm thick; 2 m long; unslotted; according to EN 60715	www.wago.com/210-113
	Item no.: 210-114 Steel carrier rail; 35 x 15 mm; 1.5 mm thick; 2 m long; unslotted; similar to EN 60715	www.wago.com/210-114
	Item no.: 210-115 Steel carrier rail; 35 x 7.5 mm; 1 mm thick; 2 m long; slotted; according to EN 60715; "Hole width 18 mm	www.wago.com/210-115
	Item no.: 210-118 Steel carrier rail; 35 x 15 mm; 2.3 mm thick; 2 m long; unslotted; according to EN 60715	www.wago.com/210-118
	Item no.: 210-196 Aluminum carrier rail; 35 x 8.2 mm; 1.6 mm thick; 2 m long; unslotted; similar to EN 60715; silver-colored	www.wago.com/210-196
	Item no.: 210-197 Steel carrier rail; 35 x 15 mm; 1.5 mm thick; 2 m long; slotted; similar to EN 60715	www.wago.com/210-197
	Item no.: 210-198 Copper carrier rail; 35 x 15 mm; 2.3 mm thick; 2 m long; unslotted; according to EN 60715; copper-colored	www.wago.com/210-198
	Item no.: 210-504 Steel carrier rail; 35 x 7.5 mm; 1 mm thick; 2 m long; slotted; galvanized; according to EN 60715	www.wago.com/210-504
	Item no.: 210-505 Steel carrier rail; 35 x 7.5 mm; 1 mm thick; 2 m long; unslotted; galvanized; according to EN 60715	www.wago.com/210-505
	Item no.: 210-506 Steel carrier rail; 35 x 15 mm; 1.5 mm thick; 2 m long; unslotted; galvanized; similar to EN 60715	www.wago.com/210-506
	Item no.: 210-508 Steel carrier rail; 35 x 15 mm; 1.5 mm thick; 2 m long; slotted; galvanized; similar to EN 60715	www.wago.com/210-508
Supply module		
	Item no.: 750-601 Power Supply; 24 VDC; fuse holder; light gray	www.wago.com/750-601
	Item no.: 750-602 Power Supply; 24 VDC; light gray	www.wago.com/750-602
	Item no.: 750-610 Power Supply; 24 VDC; fuse holder; Diagnostics	www.wago.com/750-610
	Item no.: 750-612 Power Supply; 0 … 230 V AC/DC; light gray	www.wago.com/750-612
shield connection		
	Item no.: 790-108 Shield clamping saddle; 11 mm wide; diameter of compatible conductor; 3 … 8 mm	www.wago.com/790-108

Subject to changes. Please also observe the further product documentation!

WAGO Kontakttechnik GmbH & Co. KG
Hansastr. 27
32423 Minden
Phone: +49571 887-0 | Fax: +49571 887-169
Email: info.de@wago.com | Web: www.wago.com

Do you have any questions about our products?
We are always happy to take your call at +49 (571) 887-44222.

	Item no.: 790-116 Shield clamping saddle; 19 mm wide; diameter of compatible conductor; 7 … 16 mm	www.wago.com/790-116
	Item no.: 790-124 Shield clamping saddle; 27 mm wide; diameter of compatible conductor; 6 … 24 mm	www.wago.com/790-124
	Item no.: 790-140 Shield clamping saddle; diameter of compatible conductor	www.wago.com/790-140
	Item no.: 790-208 Shield clamping saddle; 12.4 mm wide; 3 … 8 mm	www.wago.com/790-208
	Item no.: 790-216 Shield clamping saddle; 21.8 mm wide; 6 … 16 mm	www.wago.com/790-216
	Item no.: 790-220 Shield clamping saddle; 30 mm wide; 6 … 20 mm	www.wago.com/790-220
system box		
	Item no.: 850-804 IP65 enclosure; Stainless steel; WxHxD (400x123x200 mm); 4 x M20, 16 x M16, 28 x M12 cable grip	www.wago.com/850-804
	Item no.: 850-804/000-001 IP65 enclosure; Stainless steel; WxHxD (400x123x200 mm); 2 x M20, 13 x M16, 32 x M12 cable grip	www.wago.com/850-804/000-001
	Item no.: 850-805 IP65 enclosure; Stainless steel; WxHxD (600x123x200 mm); 4 x M20, 19 x M16, 67 x M12 cable grip	www.wago.com/850-805
	Item no.: 850-814/002-000 IP65 enclosure; Sheet steel (RAL 7035); WxHxD (200x120x200 mm); without flange plate	www.wago.com/850-814/002-000
	Item no.: 850-815/002-000 IP65 enclosure; Sheet steel (RAL 7035); WxHxD (300x120x200 mm); without flange plate	www.wago.com/850-815/002-000
	Item no.: 850-816/002-000 IP65 enclosure; Sheet steel (RAL 7035); WxHxD (400x120x200 mm); without flange plate	www.wago.com/850-816/002-000
	Item no.: 850-817/002-000 IP65 enclosure; Sheet steel (RAL 7035); WxHxD (600x120x200 mm); without flange plate	www.wago.com/850-817/002-000
	Item no.: 850-825 IP65 enclosure; Aluminium (RAL 7032); WxHxD (160x100x160 mm); 9 x M12, 4 x M20	www.wago.com/850-825
	Item no.: 850-826 IP65 enclosure; Aluminium (RAL 7032); WxHxD (240x100x160 mm); 4 x M20, 4 x M16, 14 x M12 cable grip	www.wago.com/850-826
	Item no.: 850-826/002-000 IP65 enclosure; Aluminium (RAL 7035); WxHxD (240x100x160 mm); 4 x M20, 4 x M16, 14 x M12 cable	

Subject to changes. Please also observe the further product documentation!

WAGO Kontakttechnik GmbH & Co. KG
Hansastr. 27
32423 Minden
Phone: +49571 887-0 | Fax: +49571 887-169
Email: info.de@wago.com | Web: www.wago.com

Do you have any questions about our products?
We are always happy to take your call at +49 (571) 887-44222.

	grip	www.wago.com/850-826/002-000
	Item no.: 850-827 IP65 enclosure; Aluminium (RAL 7032); WxHxD (320x100x160 mm); 4 x M20, 8 x M16, 17 x M12 cable grip	www.wago.com/850-827
	Item no.: 850-827/002-000 IP65 enclosure; Aluminium (RAL 7035); WxHxD (320x100x160 mm); 4 x M20, 8 x M16, 17 x M12 cable grip	www.wago.com/850-827/002-000
	Item no.: 850-828 IP65 enclosure; Aluminium (RAL 7032); WxHxD (480x100x160 mm); 4 x M20, 10 x M16, 35 x M12 cable grip	www.wago.com/850-828
	Item no.: 850-828/002-000 IP65 enclosure; Aluminium (RAL 7035); WxHxD (480x100x160 mm); 4 x M20, 10 x M16, 35 x M12 cable grip	www.wago.com/850-828/002-000
	Item no.: 850-834 IP65 enclosure; Polyester (RAL 7032); WxHxD (164x100x164 mm); 9 x M12, 4 x M20	www.wago.com/850-834
	Item no.: 850-835 IP65 enclosure; Polyester (RAL 7032); WxHxD (244x100x164 mm); 4 x M20, 4 x M16, 14 x M12 cable grip	www.wago.com/850-835
	Item no.: 850-836 IP65 enclosure; Polyester (RAL 7032); WxHxD (324x100x164 mm); 4 x M20, 8 x M16, 17 x M12 cable grip	www.wago.com/850-836

Marking accessories

	Item no.: 2009-145 Mini-WSB Inline; for Smart Printer; 1700 pieces on roll; stretchable 5 - 5.2 mm; plain; snap-on type; white	www.wago.com/2009-145
	Item no.: 2009-145/000-002 Mini-WSB Inline; for Smart Printer; 1700 pieces on roll; stretchable 5 - 5.2 mm; plain; snap-on type; white	www.wago.com/2009-145/000-002
	Item no.: 2009-145/000-005 Mini-WSB Inline; for Smart Printer; 1700 pieces on roll; stretchable 5 - 5.2 mm; plain; snap-on type; red	www.wago.com/2009-145/000-005
	Item no.: 2009-145/000-006 Mini-WSB Inline; for Smart Printer; 1700 pieces on roll; stretchable 5 - 5.2 mm; plain; snap-on type; blue	www.wago.com/2009-145/000-006
	Item no.: 2009-145/000-007 Mini-WSB Inline; for Smart Printer; 1700 pieces on roll; stretchable 5 - 5.2 mm; plain; snap-on type; white	www.wago.com/2009-145/000-007
	Item no.: 2009-145/000-012 Mini-WSB Inline; for Smart Printer; 1700 pieces on roll; stretchable 5 - 5.2 mm; plain; snap-on type; orange	www.wago.com/2009-145/000-012

Subject to changes. Please also observe the further product documentation!

WAGO Kontakttechnik GmbH & Co. KG
Hansastr. 27
32423 Minden
Phone: +49571 887-0 | Fax: +49571 887-169
Email: info.de@wago.com | Web: www.wago.com

Do you have any questions about our products?
We are always happy to take your call at +49 (571) 887-44222.

	Item no.: 2009-145/000-023 Mini-WSB Inline; for Smart Printer; 1700 pieces on roll; stretchable 5 - 5.2 mm; plain; snap-on type; green	www.wago.com/2009-145/000-023
	Item no.: 2009-145/000-024 Mini-WSB Inline; for Smart Printer; 1700 pieces on roll; stretchable 5 - 5.2 mm; plain; snap-on type; violet	www.wago.com/2009-145/000-024
	Item no.: 248-501 Miniature WSB Quick marking system; plain; Marker width 5 mm; 10 strips with 10 markers per card	www.wago.com/248-501
	Item no.: 248-501/000-002 Mini-WSB marking card; as card; not stretchable; plain; snap-on type; yellow	www.wago.com/248-501/000-002
	Item no.: 248-501/000-005 Mini-WSB marking card; as card; not stretchable; plain; snap-on type; red	www.wago.com/248-501/000-005
	Item no.: 248-501/000-006 Mini-WSB marking card; as card; not stretchable; plain; snap-on type; blue	www.wago.com/248-501/000-006
	Item no.: 248-501/000-007 Mini-WSB marking card; as card; not stretchable; plain; snap-on type; gray	www.wago.com/248-501/000-007
	Item no.: 248-501/000-012 Mini-WSB marking card; as card; not stretchable; plain; snap-on type; orange	www.wago.com/248-501/000-012
	Item no.: 248-501/000-017 Mini-WSB marking card; as card; not stretchable; plain; snap-on type; light green	www.wago.com/248-501/000-017
	Item no.: 248-501/000-023 Mini-WSB marking card; as card; not stretchable; plain; snap-on type; green	www.wago.com/248-501/000-023
	Item no.: 248-501/000-024 Mini-WSB marking card; as card; not stretchable; plain; snap-on type; violet	www.wago.com/248-501/000-024
	Item no.: 750-100 Marker card; as a DIN A4 sheet; plain; white	www.wago.com/750-100
	Item no.: 750-103 Group marker carrier; transparent	www.wago.com/750-103
	Item no.: 750-106 Group marker carrier; transparent	www.wago.com/750-106

Subject to changes. Please also observe the further product documentation!

WAGO Kontakttechnik GmbH & Co. KG
Hansastr. 27
32423 Minden
Phone: +49571 887-0 | Fax: +49571 887-169
Email: info.de@wago.com | Web: www.wago.com

Do you have any questions about our products?
We are always happy to take your call at +49 (571) 887-44222.

Downloads

Documentation

Manual

2-channel, 24VDC, 0.5A, with diagnostics short-circuit protected, high-side switching	V 1.2.0	pdf 2.4 MB	Download

Bid Text

750-506/000-800 doc - Datei	Jul 12, 2017	doc 30.7 kB	Download
750-506/000-800 GAEB X81 - Datei	Feb 19, 2019	xml 5.0 kB	Download

Additional Information

Disposal; Electrical and electronic equipment, Packaging	V 1.0.0	pdf 265.8 kB	Download

System Description

Use in Hazardous Environments Term definition, marking and installation regulations	V 1.0.0	pdf 1.0 MB	Download
750/753 Series I/O-System – General Product Information		pdf 1.7 MB	Download
Overview on WAGO-I/O-SYSTEM 750 approvals		pdf 780.2 kB	Download
Design Notes Basic conditions and recommendations for higher operational safety	V 2.0.0	pdf 1.5 MB	Download

CAD/CAE-Data

CAD data

2D/3D Models 750-506/000-800	URL	Download

CAE data

EPLAN Data Portal 750-506/000-800	URL	Download
WSCAD Universe 750-506/000-800	URL	Download

Subject to changes. Please also observe the further product documentation!

WAGO Kontakttechnik GmbH & Co. KG
Hansastr. 27
32423 Minden
Phone: +49571 887-0 | Fax: +49571 887-169
Email: info.de@wago.com | Web: www.wago.com

Do you have any questions about our products?
We are always happy to take your call at +49 (571) 887-44222.

Device Files

Device Driver

WAGO USB Service Kabel Treiber / Serie 750 und 857	6.5.3.0 Sep 10, 2014	zip 4.8 MB	Download

Installation Notes

Product family

750/753 Series – I/O System
Show all products from the family

Subject to changes. Please also observe the further product documentation!

WAGO Kontakttechnik GmbH & Co. KG
Hansastr. 27
32423 Minden
Phone: +49571 887-0 | Fax: +49571 887-169
Email: info.de@wago.com | Web: www.wago.com

Do you have any questions about our products?
We are always happy to take your call at +49 (571) 887-44222.