Data sheet | Item number: 750-885/025-000

Controller ETHERNET; 3rd Generation; SD Card Slot; Media Redundancy; Ext. Temperature; light gray

www.wago.com/750-885_025-000

RoHS ✓ Compliant

BOMcheck.net

Color:

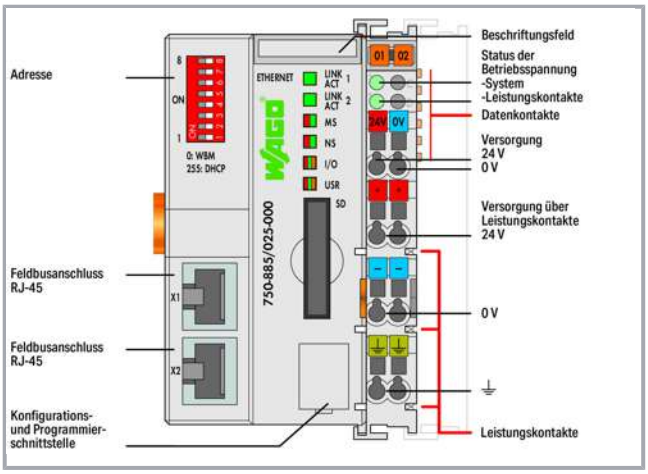

Subject to changes. Please also observe the further product documentation!

WAGO Kontakttechnik GmbH & Co. KG
Hansastr. 27
32423 Minden
Phone: +49571 887-0 | Fax: +49571 887-169
Email: info.de@wago.com | Web: www.wago.com

Do you have any questions about our products?
We are always happy to take your call at +49 (571) 887-44222.

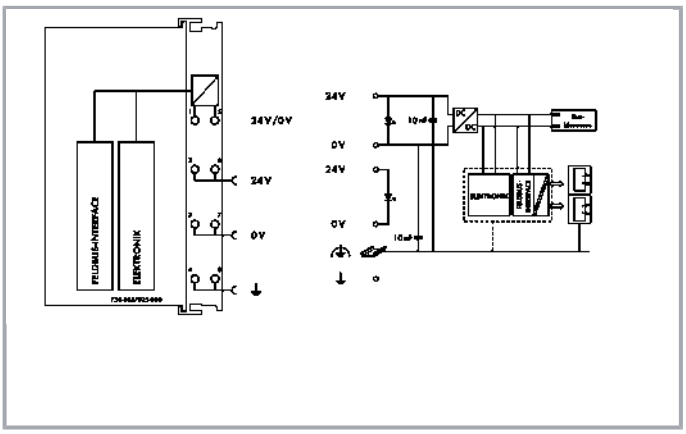

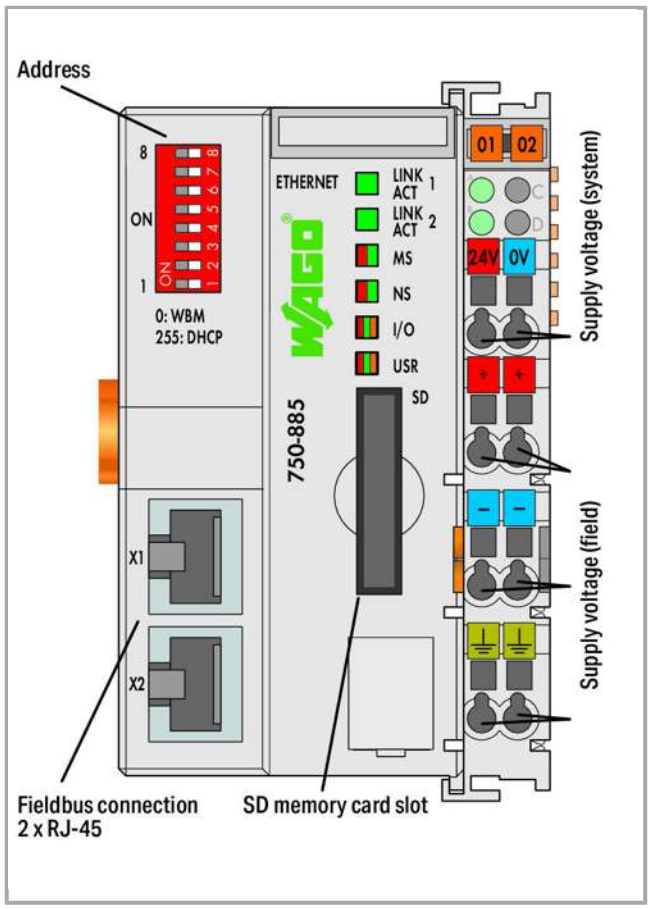

Item description

In conjunction with the WAGO I/O System, the ETHERNET Controller serves ETHERNET networks requiring fast and safe media redundancy. The controller supports all digital, analog and specialty modules found within the 750/753 Series, and is suitable for data rates of 10/100 Mbit/s.

Media redundancy is achieved by operating the controller in two separate networks – which is accessible via two different IP addresses (including two MAC IDs). Cross communication between separate channels is not possible. The two separate ETHERNET interfaces allow redundant connection of two transmission paths (no hub or switch required). Both interfaces support autonegotiation and Auto-MDI(X). The DIP switch configures the last byte of both default IP addresses and may be used for IP address assignment (DHCP, BootP).

The media redundancy controller is designed for fieldbus communication via MODBUS/TCP in ETHERNET networks. It also supports a wide variety of standard ETHERNET protocols (HTTP, BootP, DHCP, DNS, FTP).

An integrated Webserver provides user configuration options, while displaying the controller's status information.

The IEC 61131-3 programmable controller is multitasking-capable and features a capacitor-backed RTC.

A data memory of 1 MB is available.

For memory expansion, the 750-885 Controller is equipped with a removable memory card slot.

Subject to changes. Please also observe the further product documentation!

WAGO Kontakttechnik GmbH & Co. KG
Hansastr. 27
32423 Minden
Phone: +49571 887-0 | Fax: +49571 887-169
Email: info.de@wago.com | Web: www.wago.com

Do you have any questions about our products?
We are always happy to take your call at +49 (571) 887-44222.

Data
Technical Data

Communication	EtherNet/IP Modbus (TCP, UDP) Ethernet
Ethernet protocol	HTTP BootP DHCP DNS SNTP FTP SNMP
Redundancy function	via two logically separated ETHERNET interfaces
Visualization	Web Visu
CPU	32 bits
Programming languages per IEC 61131-3	Instruction List (IL) Ladder Diagram (LD) Function Block Diagram (FBD), Continuous Function Chart (CFC) Structured Text (ST) Sequential Function Chart (SFC)
Programming environment	WAGO-I/O-PRO V2.3 (based on CODESYS V2.3)
Configuration options	WAGO-I/O-CHECK Web-based management
Baud rate (communication/fieldbus 1)	10/100 Mbit/s
Baud rate	10/100 Mbit/s
Transmission medium (communication/fieldbus)	Twisted Pair S-UTP; 100 Ω; Cat. 5; 100 m maximum cable length
Transmission performance	Class D per EN 50173
Program memory	1024 kByte
Data memory	1024 kByte
Software non-volatile memory	32 Kbytes
Type of memory card	SD and SDHC up to 32 GB (all guaranteed properties only valid with WAGO 758-879/000-001 Memory Card)
Memory card slot	Push-push mechanism; Cover lid (sealable)
Number of modules per node max.	250
Number of I/O modules without bus extension max.	64
Input and output process image (Fieldbus) max.	1020 Worte/1020 Worte
Indicators	LED (LINK/ACT) green: Network connection via ports 1 … 2; LED (MS, NS) red/green: Status of node, network; LED (I/O, USR) red /green/orange: Local data bus status, status programmable by user; LED (A, B) green: System power supply status, field supply
System supply voltage	DC 24 V(-25 … +30 %); via pluggable connector (CAGE CLAMP®

Subject to changes. Please also observe the further product documentation!

WAGO Kontakttechnik GmbH & Co. KG
Hansastr. 27
32423 Minden
Phone: +49571 887-0 | Fax: +49571 887-169
Email: info.de@wago.com | Web: www.wago.com

Do you have any questions about our products?
We are always happy to take your call at +49 (571) 887-44222.

	connection)
Input current typ. at rated load (24 V)	500 mA
Efficiency of the power supply (typ.) at nominal load (24 V)	90 %
Current consumption, system supply (5 V)	450 mA
Total current for system supply	1,700 mA
Field supply voltage	DC 24 V (-25 … +30 %); via power jumper contacts
Current carrying capacity of the power jumper contacts	10 A
Number of outgoing power jumper contacts	3
Isolation	500 V system/field

Connection data

Connection technology: communication/fieldbus	EtherNet/IP: 2 x RJ-45; Modbus TCP/UDP: 2 x RJ-45
Connection technology: system supply	2 x CAGE CLAMP®
Connection technology: field supply	6 x CAGE CLAMP®
Connection type (1)	System/field supply
Solid conductor	0,08 … 2,5 mm² / 28 … 14 AWG
Fine-stranded conductor	0,08 … 2,5 mm² / 28 … 14 AWG
Strip length	8 … 9 mm / 0.31 … 0.35 inch
Connection technology: Device configuration	1 x Male connector; 4-pole

Geometrical Data

Width	61,5 mm / 2.421 inch
Height	71,9 mm / 2.831 inch
Height from upper-edge of DIN-35 rail	64,7 mm / 2.547 inch
Depth	100 mm / 3.937 inch

Mechanical data

Weight	161.4 g
Color	light gray
Housing material	Polycarbonate, polyamide 6.6
Conformity marking	CE

Environmental Requirements

Surrounding air (operating) temperature	-20 … 60 °C
Surrounding air (storage) temperature	-40 … 85 °C
Protection class	IP20

Subject to changes. Please also observe the further product documentation!

WAGO Kontakttechnik GmbH & Co. KG
Hansastr. 27
32423 Minden
Phone: +49571 887-0 | Fax: +49571 887-169
Email: info.de@wago.com | Web: www.wago.com

Do you have any questions about our products?
We are always happy to take your call at +49 (571) 887-44222.

Degree of pollution (5)	2 per IEC 61131-2
Operating altitude	without temperature derating: 0 … 2000 m; with temperature derating: 2000 … 5000 m (0.5 K/100 m); 5000 m (max.)
Relative air humidity (no condensation)	95 %
Relative humidity	Short-term condensation per Class 3K6/IEC EN 60721-3-3 and E-DIN 40046-721-3, accounting for a temperature range of −20 to +60 °C (except for wind-driven precipitation, water and ice formation)
Mounting position	any
Type of mounting	DIN-35 rail
Vibration resistance	4g per IEC 60068-2-6
Shock resistance	15g per IEC 60068-2-27
EMC immunity to interference	per EN 61000-6-2, marine applications
EMC emission of interference	per EN 61000-6-3, marine applications
Exposure to pollutants	Per IEC 60068-2-42 and IEC 60068-2-43
Permissible H_2S contaminant concentration at a relative humidity 75 %	10 ppm
Permissible SO_2 contaminant concentration at a relative humidity 75 %	25 ppm

Commercial data

Product Group	15 (Remote I/O)
Packaging type	BOX
Country of origin	DE
GTIN	4050821560968
Customs Tariff No.	85371091990

Approvals / Certificates

Ex-Approvals

Logo	Approval	Additional Approval Text	Certificate name
PTB 0102	**ATEX** TUEV Nord Cert GmbH	EN 60079-0	TÜV 07 ATEX 554086 X en.
IECEx	**TUEV Nord** TUEV Nord Cert GmbH	IEC 60079-0	IECEx TUN 09.0001 X
	UL	UL 121201	E198726

Subject to changes. Please also observe the further product documentation!

WAGO Kontakttechnik GmbH & Co. KG
Hansastr. 27
32423 Minden
Phone: +49571 887-0 | Fax: +49571 887-169
Email: info.de@wago.com | Web: www.wago.com

Do you have any questions about our products?
We are always happy to take your call at +49 (571) 887-44222.

	Underwriters Laboratories Inc. (HAZARDOUS LOCATIONS)	Sec.1

Country specific Approvals

Logo	Approval	Additional Approval Text	Certificate name
	KC National Radio Research Agency	Article 58-2, Clause 3	MSIP-REM-W43-PFC750

Ship Approvals

Logo	Approval	Additional Approval Text	Certificate name
	ABS American Bureau of Shipping	-	19-HG1821812-PDA
	DNV GL Det Norske Veritas, Germanischer Lloyd	-	TAA00001J4
	LR Lloyds Register	-	LR_19_20048
	PRS Polski Rejestr Statków	-	TE/2237/880590/19

UL-Approvals

Logo	Approval	Additional Approval Text	Certificate name
	UL UL International Netherlands B.V. (ORDINARY LOCATIONS)	UL 508	E175199 Sec.1

Counterpart

Subject to changes. Please also observe the further product documentation!

WAGO Kontakttechnik GmbH & Co. KG
Hansastr. 27
32423 Minden
Phone: +49571 887-0 | Fax: +49571 887-169
Email: info.de@wago.com | Web: www.wago.com

Do you have any questions about our products?
We are always happy to take your call at +49 (571) 887-44222.

Compatible products

memory card

	Item no.: 758-879/000-001 Memory Card SD; SLC-NAND; 2 GByte; Temperature from -40 to 90 °C	www.wago.com/758-879/000-001
	Item no.: 758-879/000-2108 Memory Card SD; pSLC-NAND; 8 GB; Temperature range: -40 to 90°C	www.wago.com/758-879/000-2108

General accessories

	Item no.: 750-921 Bluetooth® Adapter; light gray	www.wago.com/750-921
	Item no.: 750-923 Configuration cable; USB connector; Length: 2.5 m; black	www.wago.com/750-923
	Item no.: 750-923/000-001 Configuration cable; USB connector; Length: 5 m	www.wago.com/750-923/000-001

Marking accessories

	Item no.: 2009-145 Mini-WSB Inline; for Smart Printer; 1700 pieces on roll; stretchable 5 - 5.2 mm; plain; snap-on type; white	www.wago.com/2009-145
	Item no.: 2009-145/000-002 Mini-WSB Inline; for Smart Printer; 1700 pieces on roll; stretchable 5 - 5.2 mm; plain; snap-on type; white	www.wago.com/2009-145/000-002
	Item no.: 2009-145/000-005 Mini-WSB Inline; for Smart Printer; 1700 pieces on roll; stretchable 5 - 5.2 mm; plain; snap-on type; red	www.wago.com/2009-145/000-005
	Item no.: 2009-145/000-006 Mini-WSB Inline; for Smart Printer; 1700 pieces on roll; stretchable 5 - 5.2 mm; plain; snap-on type; blue	www.wago.com/2009-145/000-006
	Item no.: 2009-145/000-007 Mini-WSB Inline; for Smart Printer; 1700 pieces on roll; stretchable 5 - 5.2 mm; plain; snap-on type; white	www.wago.com/2009-145/000-007
	Item no.: 2009-145/000-012	

Subject to changes. Please also observe the further product documentation!

WAGO Kontakttechnik GmbH & Co. KG
Hansastr. 27
32423 Minden
Phone: +49571 887-0 | Fax: +49571 887-169
Email: info.de@wago.com | Web: www.wago.com

Do you have any questions about our products?
We are always happy to take your call at +49 (571) 887-44222.

	Mini-WSB Inline; for Smart Printer; 1700 pieces on roll; stretchable 5 - 5.2 mm; plain; snap-on type; orange	www.wago.com/2009-145/000-012
	Item no.: 2009-145/000-023 Mini-WSB Inline; for Smart Printer; 1700 pieces on roll; stretchable 5 - 5.2 mm; plain; snap-on type; green	www.wago.com/2009-145/000-023
	Item no.: 2009-145/000-024 Mini-WSB Inline; for Smart Printer; 1700 pieces on roll; stretchable 5 - 5.2 mm; plain; snap-on type; violet	www.wago.com/2009-145/000-024
	Item no.: 248-501 Miniature WSB Quick marking system; plain; Marker width 5 mm; 10 strips with 10 markers per card	www.wago.com/248-501
	Item no.: 248-501/000-002 Mini-WSB marking card; as card; not stretchable; plain; snap-on type; yellow	www.wago.com/248-501/000-002
	Item no.: 248-501/000-005 Mini-WSB marking card; as card; not stretchable; plain; snap-on type; red	www.wago.com/248-501/000-005
	Item no.: 248-501/000-006 Mini-WSB marking card; as card; not stretchable; plain; snap-on type; blue	www.wago.com/248-501/000-006
	Item no.: 248-501/000-007 Mini-WSB marking card; as card; not stretchable; plain; snap-on type; gray	www.wago.com/248-501/000-007
	Item no.: 248-501/000-012 Mini-WSB marking card; as card; not stretchable; plain; snap-on type; orange	www.wago.com/248-501/000-012
	Item no.: 248-501/000-017 Mini-WSB marking card; as card; not stretchable; plain; snap-on type; light green	www.wago.com/248-501/000-017
	Item no.: 248-501/000-023 Mini-WSB marking card; as card; not stretchable; plain; snap-on type; green	www.wago.com/248-501/000-023
	Item no.: 248-501/000-024 Mini-WSB marking card; as card; not stretchable; plain; snap-on type; violet	www.wago.com/248-501/000-024
	Item no.: 750-100 Marker card; as a DIN A4 sheet; plain; white	www.wago.com/750-100
	Item no.: 750-103 Group marker carrier; transparent	www.wago.com/750-103
	Item no.: 750-106	

Subject to changes. Please also observe the further product documentation!

WAGO Kontakttechnik GmbH & Co. KG
Hansastr. 27
32423 Minden
Phone: +49571 887-0 | Fax: +49571 887-169
Email: info.de@wago.com | Web: www.wago.com

Do you have any questions about our products?
We are always happy to take your call at +49 (571) 887-44222.

	Group marker carrier; transparent	www.wago.com/750-106

software

	Item no.: 759-333 WAGO-I/O-PRO	www.wago.com/759-333
	Item no.: 759-333/000-923 WAGO-I/O-PRO; USB-Set	www.wago.com/759-333 /000-923
	Item no.: 759-911 WAGO-I/O-PRO; CD	www.wago.com/759-911

wiring and connectors

	Item no.: 750-975 ETHERNET RJ-45 connector, IP20; ETHERNET 10/100 Mbit/s; for field assembly; light gray	www.wago.com/750-975
	Item no.: 750-977/000-011 Connector ETHERNET; RJ-45; Cat. 6A; straight; Code T568A; AWG 22	www.wago.com/750-977 /000-011
	Item no.: 750-977/000-012 Connector ETHERNET; RJ-45; Cat. 6A; straight; Code T568B; AWG 22	www.wago.com/750-977 /000-012
	Item no.: 750-977/000-021 Connector ETHERNET; RJ-45; Cat. 6A; straight; Code T568A; AWG 24	www.wago.com/750-977 /000-021
	Item no.: 750-977/000-022 Connector ETHERNET; RJ-45; Cat. 6A; straight; Code T568B; AWG 24	www.wago.com/750-977 /000-022
	Item no.: 750-978/000-011 Connector ETHERNET; RJ-45; Cat. 6A; straight; Code T568A; AWG 22; Strain relief	www.wago.com/750-978 /000-011
	Item no.: 750-978/000-012 Connector ETHERNET; RJ-45; Cat. 6A; straight; Code T568B; AWG 22; Strain relief	www.wago.com/750-978 /000-012
	Item no.: 750-978/000-021 Connector ETHERNET; RJ-45; Cat. 6A; straight; Code T568A; AWG 24; Strain relief	www.wago.com/750-978 /000-021
	Item no.: 750-978/000-022 Connector ETHERNET; RJ-45; Cat. 6A; straight; Code T568B; AWG 24; Strain relief	www.wago.com/750-978 /000-022
	Item no.: 750-979/000-011 Connector ETHERNET; RJ-45; Cat. 6A; angled; Code T568A; AWG 22; Strain relief	www.wago.com/750-979 /000-011

Subject to changes. Please also observe the further product documentation!

WAGO Kontakttechnik GmbH & Co. KG
Hansastr. 27
32423 Minden
Phone: +49571 887-0 | Fax: +49571 887-169
Email: info.de@wago.com | Web: www.wago.com

Do you have any questions about our products?
We are always happy to take your call at +49 (571) 887-44222.

	Item no.: 750-979/000-012 Connector ETHERNET; RJ-45; Cat. 6A; angled; Code T568B; AWG 22; Strain relief	www.wago.com/750-979/000-012
	Item no.: 750-979/000-021 Connector ETHERNET; RJ-45; Cat. 6A; angled; Code T568A; AWG 24; Strain relief	www.wago.com/750-979/000-021
	Item no.: 750-979/000-022 Connector ETHERNET; RJ-45; Cat. 6A; angled; Code T568B; AWG 24; Strain relief	www.wago.com/750-979/000-022
shield connection		
	Item no.: 790-108 Shield clamping saddle; 11 mm wide; diameter of compatible conductor; 3 ... 8 mm	www.wago.com/790-108
	Item no.: 790-116 Shield clamping saddle; 19 mm wide; diameter of compatible conductor; 7 ... 16 mm	www.wago.com/790-116
	Item no.: 790-124 Shield clamping saddle; 27 mm wide; diameter of compatible conductor; 6 ... 24 mm	www.wago.com/790-124
	Item no.: 790-140 Shield clamping saddle; diameter of compatible conductor	www.wago.com/790-140
	Item no.: 790-208 Shield clamping saddle; 12.4 mm wide; 3 ... 8 mm	www.wago.com/790-208
	Item no.: 790-216 Shield clamping saddle; 21.8 mm wide; 6 ... 16 mm	www.wago.com/790-216
	Item no.: 790-220 Shield clamping saddle; 30 mm wide; 6 ... 20 mm	www.wago.com/790-220
Carrier rail		
	Item no.: 210-112 Steel carrier rail; 35 x 7.5 mm; 1 mm thick; 2 m long; slotted; according to EN 60715; "Hole width 25 mm	www.wago.com/210-112
	Item no.: 210-113 Steel carrier rail; 35 x 7.5 mm; 1 mm thick; 2 m long; unslotted; according to EN 60715	www.wago.com/210-113
	Item no.: 210-114 Steel carrier rail; 35 x 15 mm; 1.5 mm thick; 2 m long; unslotted; similar to EN 60715	www.wago.com/210-114
	Item no.: 210-115 Steel carrier rail; 35 x 7.5 mm; 1 mm thick; 2 m long; slotted; according to EN 60715; "Hole width 18 mm	www.wago.com/210-115
	Item no.: 210-118 Steel carrier rail; 35 x 15 mm; 2.3 mm thick; 2 m long; unslotted; according to EN 60715	www.wago.com/210-118
	Item no.: 210-196 Aluminum carrier rail; 35 x 8.2 mm; 1.6 mm thick; 2 m long; unslotted; similar to EN 60715; silver-colored	www.wago.com/210-196

Subject to changes. Please also observe the further product documentation!

WAGO Kontakttechnik GmbH & Co. KG
Hansastr. 27
32423 Minden
Phone: +49571 887-0 | Fax: +49571 887-169
Email: info.de@wago.com | Web: www.wago.com

Do you have any questions about our products?
We are always happy to take your call at +49 (571) 887-44222.

	Item no.: 210-197 Steel carrier rail; 35 x 15 mm; 1.5 mm thick; 2 m long; slotted; similar to EN 60715	www.wago.com/210-197
	Item no.: 210-198 Copper carrier rail; 35 x 15 mm; 2.3 mm thick; 2 m long; unslotted; according to EN 60715; copper-colored	www.wago.com/210-198
	Item no.: 210-504 Steel carrier rail; 35 x 7.5 mm; 1 mm thick; 2 m long; slotted; galvanized; according to EN 60715	www.wago.com/210-504
	Item no.: 210-505 Steel carrier rail; 35 x 7.5 mm; 1 mm thick; 2 m long; unslotted; galvanized; according to EN 60715	www.wago.com/210-505
	Item no.: 210-506 Steel carrier rail; 35 x 15 mm; 1.5 mm thick; 2 m long; unslotted; galvanized; similar to EN 60715	www.wago.com/210-506
	Item no.: 210-508 Steel carrier rail; 35 x 15 mm; 1.5 mm thick; 2 m long; slotted; galvanized; similar to EN 60715	www.wago.com/210-508
system box		
	Item no.: 850-804 IP65 enclosure; Stainless steel; WxHxD (400x123x200 mm); 4 x M20, 16 x M16, 28 x M12 cable grip	www.wago.com/850-804
	Item no.: 850-804/000-001 IP65 enclosure; Stainless steel; WxHxD (400x123x200 mm); 2 x M20, 13 x M16, 32 x M12 cable grip	www.wago.com/850-804/000-001
	Item no.: 850-805 IP65 enclosure; Stainless steel; WxHxD (600x123x200 mm); 4 x M20, 19 x M16, 67 x M12 cable grip	www.wago.com/850-805
	Item no.: 850-814/002-000 IP65 enclosure; Sheet steel (RAL 7035); WxHxD (200x120x200 mm); without flange plate	www.wago.com/850-814/002-000
	Item no.: 850-815/002-000 IP65 enclosure; Sheet steel (RAL 7035); WxHxD (300x120x200 mm); without flange plate	www.wago.com/850-815/002-000
	Item no.: 850-816/002-000 IP65 enclosure; Sheet steel (RAL 7035); WxHxD (400x120x200 mm); without flange plate	www.wago.com/850-816/002-000
	Item no.: 850-817/002-000 IP65 enclosure; Sheet steel (RAL 7035); WxHxD (600x120x200 mm); without flange plate	www.wago.com/850-817/002-000
	Item no.: 850-825 IP65 enclosure; Aluminium (RAL 7032); WxHxD (160x100x160 mm); 9 x M12, 4 x M20	www.wago.com/850-825
	Item no.: 850-826 IP65 enclosure; Aluminium (RAL 7032); WxHxD (240x100x160 mm); 4 x M20, 4 x M16, 14 x M12 cable grip	www.wago.com/850-826

Item no.: 850-826/002-000

Subject to changes. Please also observe the further product documentation!

WAGO Kontakttechnik GmbH & Co. KG
Hansastr. 27
32423 Minden
Phone: +49571 887-0 | Fax: +49571 887-169
Email: info.de@wago.com | Web: www.wago.com

Do you have any questions about our products?
We are always happy to take your call at +49 (571) 887-44222.

	IP65 enclosure; Aluminium (RAL 7035); WxHxD (240x100x160 mm); 4 x M20, 4 x M16, 14 x M12 cable grip	www.wago.com/850-826/002-000
	Item no.: 850-827 IP65 enclosure; Aluminium (RAL 7032); WxHxD (320x100x160 mm); 4 x M20, 8 x M16, 17 x M12 cable grip	www.wago.com/850-827
	Item no.: 850-827/002-000 IP65 enclosure; Aluminium (RAL 7035); WxHxD (320x100x160 mm); 4 x M20, 8 x M16, 17 x M12 cable grip	www.wago.com/850-827/002-000
	Item no.: 850-828 IP65 enclosure; Aluminium (RAL 7032); WxHxD (480x100x160 mm); 4 x M20, 10 x M16, 35 x M12 cable grip	www.wago.com/850-828
	Item no.: 850-828/002-000 IP65 enclosure; Aluminium (RAL 7035); WxHxD (480x100x160 mm); 4 x M20, 10 x M16, 35 x M12 cable grip	www.wago.com/850-828/002-000
	Item no.: 850-834 IP65 enclosure; Polyester (RAL 7032); WxHxD (164x100x164 mm); 9 x M12, 4 x M20	www.wago.com/850-834
	Item no.: 850-835 IP65 enclosure; Polyester (RAL 7032); WxHxD (244x100x164 mm); 4 x M20, 4 x M16, 14 x M12 cable grip	www.wago.com/850-835
	Item no.: 850-836 IP65 enclosure; Polyester (RAL 7032); WxHxD (324x100x164 mm); 4 x M20, 8 x M16, 17 x M12 cable grip	www.wago.com/850-836

Downloads

Documentation

Manual

WAGO MODBUS Master Configurator for configuration of MODBUS networks in WAGO-I/O-PRO (CODESYS)	V 1.1.0	pdf 1.8 MB	Download
ETHERNET-MR/SD-Fieldbus Controller 32-bit CPU, multitasking, with memory card slot	V 1.4.0	pdf 15.5 MB	Download

Bid Text

750-885/025-000 doc - Datei	May 19, 2015	doc 32.3 kB	Download
750-885/025-000 X81 - Datei	Feb 19, 2019	xml 7.8 kB	Download

Additional Information

Subject to changes. Please also observe the further product documentation!

WAGO Kontakttechnik GmbH & Co. KG
Hansastr. 27
32423 Minden
Phone: +49571 887-0 | Fax: +49571 887-169
Email: info.de@wago.com | Web: www.wago.com

Do you have any questions about our products?
We are always happy to take your call at +49 (571) 887-44222.

Disposal; Electrical and electronic equipment, Packaging	V 1.0.0	pdf 265.8 kB	Download

System Description

750 Controller, General Product Information		pdf 621.9 kB	Download
Use in Hazardous Environments Term definition, marking and installation regulations	V 1.0.0	pdf 1.0 MB	Download
Overview on WAGO-I/O-SYSTEM 750 approvals		pdf 780.2 kB	Download
Design Notes Basic conditions and recommendations for higher operational safety	V 2.0.0	pdf 1.5 MB	Download

Libraries

Library

WagoLibConfigETH_01 The library WagoLibConfigETH_01.lib library provides function blocks for accessing the device configuration (e.g., network settings, data and time, ongoing services) of the fieldbus controllers ETHERNET.	1.0.0	pdf 390.6 kB	Download

Engineering-Software

Configuration and Commissioning Software

WAGO-IO-PRO Demo-Version (759-912) / Serie 750, 758 und 762	2.3.9.55 Jul 3, 2015	zip 108.3 MB	Download
WAGOupload Small Version WAGOupload ist eine eigenstandige PC-Software zur Übertragung, Sicherung und Wiederherstellung von SPS-Applikationen auf WAGO Controllern der Serie 750	1.12.0.0 Mar 30, 2020	zip 5.9 MB	Download
(759-316) WAGO Ethernet Settings / Serie 750	6.10.06.12 Mar 29, 2019	exe 20.2 MB	Download
WAGO Extension Setting / Serie 750	2.0.2 Mar 9, 2011	zip 5.4 MB	Download
WAGO BootPServer / Serie 750 und 767	1.0 Mar 7, 2000	zip 1.1 MB	Download

Subject to changes. Please also observe the further product documentation!

WAGO Kontakttechnik GmbH & Co. KG
Hansastr. 27
32423 Minden
Phone: +49571 887-0 | Fax: +49571 887-169
Email: info.de@wago.com | Web: www.wago.com

Do you have any questions about our products?
We are always happy to take your call at +49 (571) 887-44222.

WAGOupload Full Version WAGOupload ist eine eigenstandige PC-Software zur Übertragung, Sicherung und Wiederherstellung von SPS-Applikationen auf WAGO Controllern der Serie 750.	1.12.0.0 Mar 30, 2020	zip 55.5 MB	Download

Runtime Software

Firmware

Firmware: 750-885/025-000 Controller ETHERNET; 3rd Generation; SD Card Slot; Media Redundancy; Ext. Temperature; light gray	14 Apr 11, 2019	zip 4.1 MB	Download

CAD/CAE-Data

CAD data

2D/3D Models 750-885/025-000	URL	Download

CAE data

EPLAN Data Portal 750-885/025-000	URL	Download
WSCAD Universe 750-885/025-000	URL	Download

Installation Notes

Product family

Controller 750
Show all products from the family

Subject to changes. Please also observe the further product documentation!

WAGO Kontakttechnik GmbH & Co. KG
Hansastr. 27
32423 Minden
Phone: +49571 887-0 | Fax: +49571 887-169
Email: info.de@wago.com | Web: www.wago.com

Do you have any questions about our products?
We are always happy to take your call at +49 (571) 887-44222.