Fieldbus Connector PROFIBUS; with D-sub male connector; 9-pole; light gray

www.wago.com/750-971

RoHS ✓ Compliant

BOMcheck.net

Color:

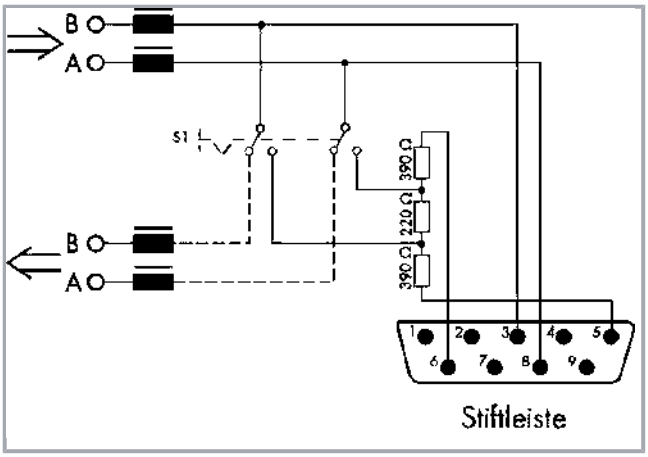

Subject to changes. Please also observe the further product documentation!

WAGO Kontakttechnik GmbH & Co. KG
Hansastr. 27
32423 Minden
Phone: +49571 887-0 | Fax: +49571 887-169
Email: info.de@wago.com | Web: www.wago.com

Do you have any questions about our products?
We are always happy to take your call at +49 (571) 887-44222.

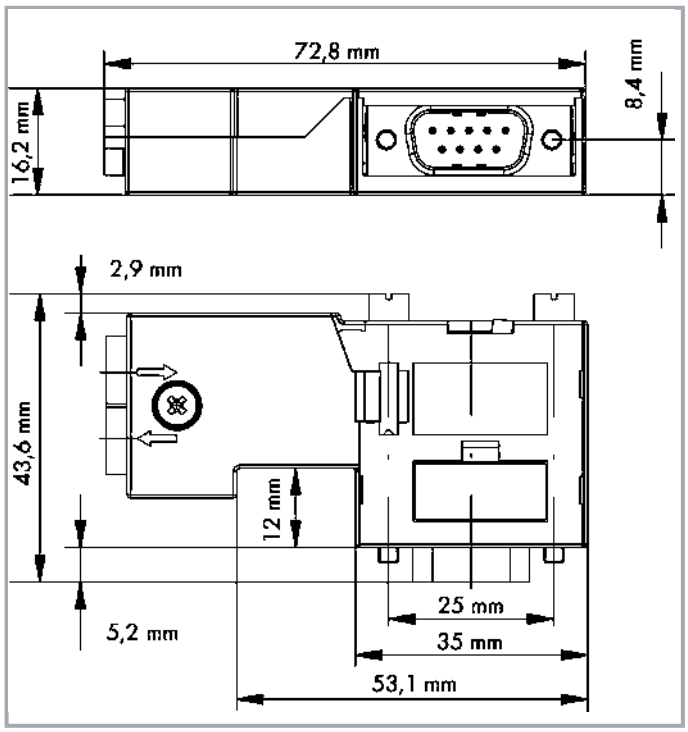

Item description

This fieldbus connector links a PROFIBUS device to a PROFIBUS line.

The fieldbus connector has the following features:

- Compact design Perfectly connects to an S7 PLC
- No losable parts
- Two horizontal cable entries for both input and output.
- Fast and maintenance-free CAGE CLAMP® connection – a locking slide keeps the clampling unit in its open position
- Externally operable switch to activate or deactivate the network terminating resistor

For the first and last station on the bus, the switch must be set to “ON” (terminating resistor activated, outgoing bus line disconnected) Switch setting to “OFF” for downstream bus stations (terminating resistor deactivated)

Data

Technical Data

Connection type	D-sub 9 plug
No. of poles	9
Communication/Fieldbus	PROFIBUS

Subject to changes. Please also observe the further product documentation!

WAGO Kontakttechnik GmbH & Co. KG
Hansastr. 27
32423 Minden
Phone: +49571 887-0 | Fax: +49571 887-169
Email: info.de@wago.com | Web: www.wago.com

Do you have any questions about our products?
We are always happy to take your call at +49 (571) 887-44222.

Baud rate	12 Mbit/s (per PROFIBUS specification)
Supply voltage	DC 4,75 … 5,25 V
Input current	5 mA

Connection data

Connection type (1)	CAGE CLAMP® terminal strip with locking slide (218 Series)
Solid conductor	0,08 … 0,5 mm² / 28 … 20 AWG
Strip length	5 … 6 mm / 0.2 … 0.24 inch

Geometrical Data

Width	43,6 mm / 1.717 inch
Height	16,2 mm / 0.638 inch
Depth	72,8 mm / 2.866 inch

Mechanical data

Connectable sheathed cable diameter	8,5 mm
Leitungseinführungen, Anzahl	2
Housing material	PC-V0
Weight	45 g
Color	light gray

Environmental Requirements

Surrounding air (operating) temperature	0 … 60 °C
Surrounding air (storage) temperature	-25 … 85 °C
Protection class	IP20
Relative air humidity (no condensation)	95 %

Commercial data

Product Group	15 (Remote I/O)
Packaging type	BOX
Country of origin	DE
GTIN	4045454633875
Customs Tariff No.	85366990990

Counterpart

Subject to changes. Please also observe the further product documentation!

WAGO Kontakttechnik GmbH & Co. KG
Hansastr. 27
32423 Minden
Phone: +49571 887-0 | Fax: +49571 887-169
Email: info.de@wago.com | Web: www.wago.com

Do you have any questions about our products?
We are always happy to take your call at +49 (571) 887-44222.

Downloads

Documentation

Bid Text

750-971 doc - Datei	Oct 6, 2017	doc 26.6 kB	Download
750-971 GAEB X81 - Datei	Feb 19, 2019	xml 4.9 kB	Download

Additional Information

Disposal; Electrical and electronic equipment, Packaging	V 1.0.0	pdf 265.8 kB	Download

CAD/CAE-Data

CAE data

EPLAN Data Portal 750-971	URL	Download
WSCAD Universe 750-971	URL	Download

Installation Notes

Subject to changes. Please also observe the further product documentation!

WAGO Kontakttechnik GmbH & Co. KG
Hansastr. 27
32423 Minden
Phone: +49571 887-0 | Fax: +49571 887-169
Email: info.de@wago.com | Web: www.wago.com

Do you have any questions about our products?
We are always happy to take your call at +49 (571) 887-44222.