System bus cable; 5-pole; Length: 10 m

www.wago.com/756-1303_060-100

RoHS ✓ Compliant

BOMcheck.net

Color:

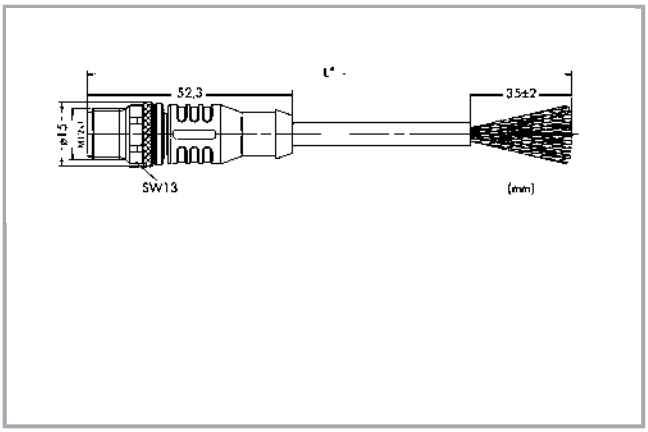

Subject to changes. Please also observe the further product documentation!

WAGO Kontakttechnik GmbH & Co. KG
Hansastr. 27
32423 Minden
Phone: +49571 887-0 | Fax: +49571 887-169
Email: info.de@wago.com | Web: www.wago.com

Do you have any questions about our products?
We are always happy to take your call at +49 (571) 887-44222.

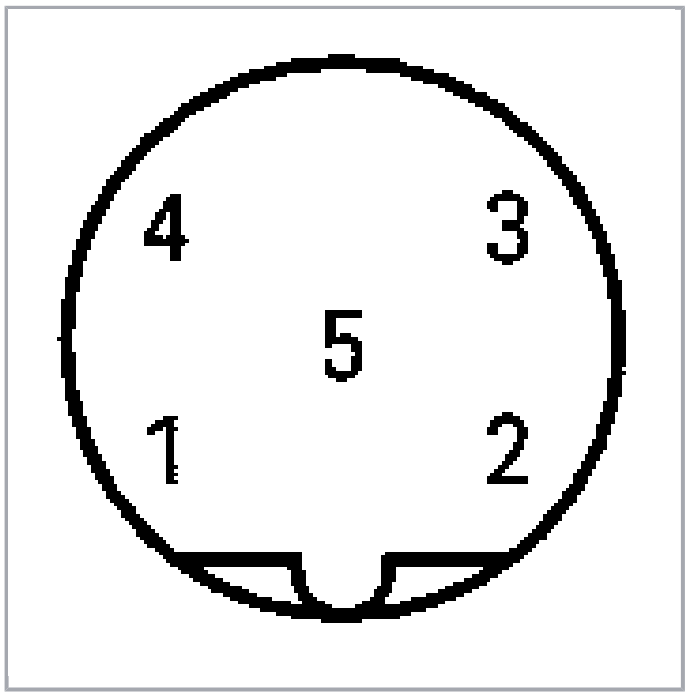

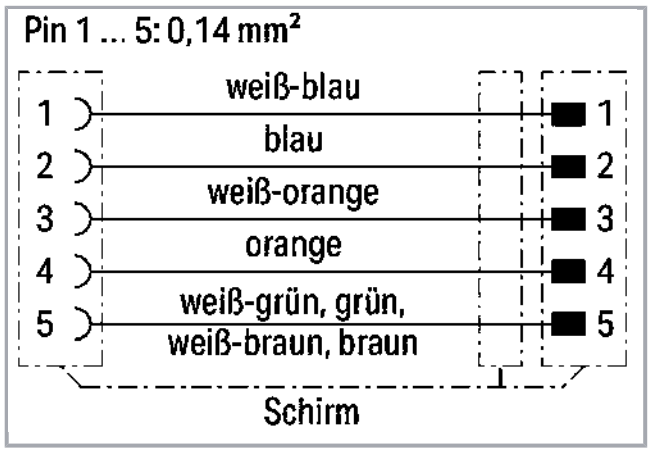

Item description

Short description:

- PUR, halogen-free
- Silicon- and CFC-free
- High resistance to microbes, hydrolysis, oil, chemicals and UV radiation
- High chemical resistance
- Cable used: UL listed

Data

Technical Data

Connection type	M12 plug - free end
No. of poles	5
Leitungsanschlussrichtung zur Steckrichtung	0 °
Steckgesichtkodierung Leitung/Adapter 1 1	B-coded
Cable length	10 m
Operating voltage	60 V
Operating current	4 A
Rated surge voltage	1.5 kV per IEC 61076-2-101
Contact resistance	10 MΩ

Subject to changes. Please also observe the further product documentation!

WAGO Kontakttechnik GmbH & Co. KG
Hansastr. 27
32423 Minden
Phone: +49571 887-0 | Fax: +49571 887-169
Email: info.de@wago.com | Web: www.wago.com

Do you have any questions about our products?
We are always happy to take your call at +49 (571) 887-44222.

Insulation resistance	5000 MΩ
Resistance of conductor	≤ 145 Ω/km

Mechanical data

bending radius	5 x cable diameter (min.)
Cable diameter	6 mm
Bauartkurzzeichen	KS-02YS(ST+C)11Y 4x2xAWG26/7-100 Ω, shielded
Screening	Aluminum-laminated foil and tinned copper braid, optical coverage approx. 65 %
Conductor design	Bare copper wire (26/7 AWG)
Leiterisolierung	Zell-PE; Core Ø: 1.0 mm (max.)
Housing material	TPU/TPU, black (~ RAL 9005)
Contact material	CuZn
Contact plating	CuNi/Au
Materialeigenschaften der Anschlüsse	Hexagon knurled nut: CuZn; Knurled nut surface: nickel-plated; Sealing ring: FPM (Viton)
Mating cycles	100
Tightening torque	1 Nm
Weight	700 g
Color	yellow

Environmental Requirements

Surrounding air (operating) temperature	-25 … 60 °C
Protection class	IP67
Degree of pollution (5)	3/2 per IEC 60664-1

Commercial data

Packaging type	BOX
Country of origin	DE
GTIN	4045454791285
Customs Tariff No.	85444290900

Counterpart

Subject to changes. Please also observe the further product documentation!

WAGO Kontakttechnik GmbH & Co. KG
Hansastr. 27
32423 Minden
Phone: +49571 887-0 | Fax: +49571 887-169
Email: info.de@wago.com | Web: www.wago.com

Do you have any questions about our products?
We are always happy to take your call at +49 (571) 887-44222.

Downloads

Documentation

System Description

I/O-SYSTEM – SPEEDWAY, General Product Information	pdf 1.1 MB	Download

CAD/CAE-Data

CAE data

WSCAD Universe 756-1303/060-100	URL	Download

Installation Notes

Subject to changes. Please also observe the further product documentation!

WAGO Kontakttechnik GmbH & Co. KG
Hansastr. 27
32423 Minden
Phone: +49571 887-0 | Fax: +49571 887-169
Email: info.de@wago.com | Web: www.wago.com

Do you have any questions about our products?
We are always happy to take your call at +49 (571) 887-44222.