1-conductor male connector; clamping collar; 4 mm²; Pin spacing 5 mm; 12-pole; 4,00 mm²; gray

www.wago.com/769-612_002-000

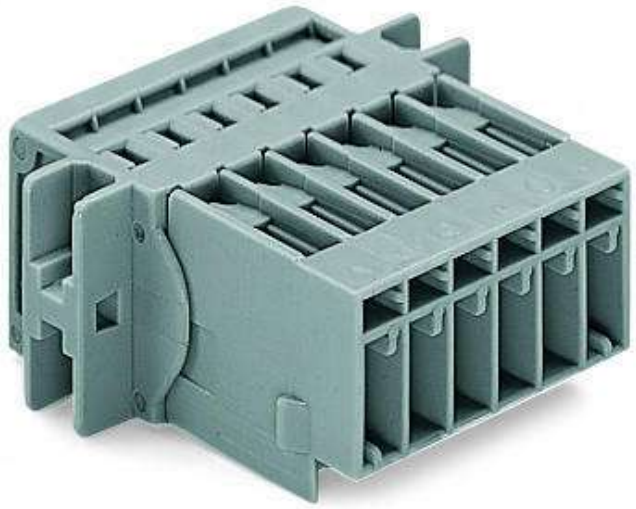

RoHS Compliant ✓ BOMcheck.net Color:

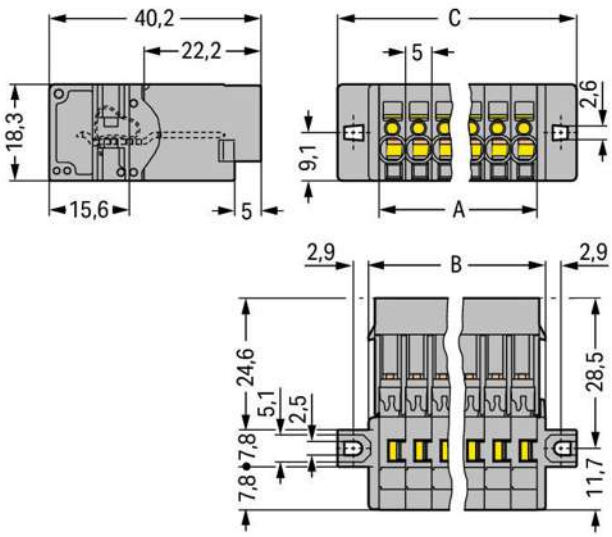

Data

Electrical data

Ratings per IEC/EN 60664-1

Rated voltage (III / 3)	500 V
Rated impulse voltage (III / 3)	6 kV
Rated current	32 A
Legend (ratings)	(III / 3) ≙ Overvoltage category III / Pollution degree 3

Connection data

Connection technology	CAGE CLAMP®
Actuation type	Operating tool
Connectable conductor materials	Copper

Subject to changes. Please also observe the further product documentation!

WAGO Kontakttechnik GmbH & Co. KG
Hansastr. 27
32423 Minden
Phone: +49571 887-0 | Fax: +49571 887-169
Email: info.de@wago.com | Web: www.wago.com

Do you have any questions about our products?
We are always happy to take your call at +49 (571) 887-44222.

Nominal cross section	4 mm²
Solid conductor	0,08 … 4 mm² / 28 … 12 AWG
Fine-stranded conductor	0,08 … 4 mm² / 28 … 12 AWG
Strip length	8 … 9 mm / 0.31 … 0.35 inch
No. of poles	12
Total number of connection points	12
Total number of potentials	12
Type of wiring	Front-entry wiring

Geometrical Data

Pin spacing	5 mm / 0.197 inch
Width	75,4 mm / 2.969 inch
Height from the surface	18,3 mm / 0.72 inch
Depth	40,2 mm / 1.583 inch

Mechanical data

Mounting type	Mounting flange

Plug connection

Contact type (pluggable connector)	Male connector/plug
Connector connection type	for conductor

Material Data

Color	gray
Insulating material	Polyamide 66 (PA 66)
Fire load	0.733 MJ
Weight	35.9 g

Commercial data

Packaging type	BOX
Country of origin	PL
GTIN	4044918521734
Customs Tariff No.	85366990990

Approvals / Certificates

Country specific Approvals

Subject to changes. Please also observe the further product documentation!

WAGO Kontakttechnik GmbH & Co. KG
Hansastr. 27
32423 Minden
Phone: +49571 887-0 | Fax: +49571 887-169
Email: info.de@wago.com | Web: www.wago.com

Do you have any questions about our products?
We are always happy to take your call at +49 (571) 887-44222.

Logo	Approval	Additional Approval Text	Certificate name
	CCA DEKRA Certification B.V.	EN 61984	2190419.02
	CCA DEKRA Certification B.V.	EN 60947	NTR NL-7626
	CSA DEKRA Certification B.V.	C22.2 No. 158	1101144
	KEMA/KEUR DEKRA Certification B.V.	EN 60947	2190419.01

Ship Approvals

Logo	Approval	Additional Approval Text	Certificate name
	DNV GL Det Norske Veritas, Germanischer Lloyd	-	TAE00001V2

UL-Approvals

Logo	Approval	Additional Approval Text	Certificate name
	UR Underwriters Laboratories Inc.	UL 1059	20190731-E45172
	UR Underwriters Laboratories Inc.	UL 1977	20151210-E45171

Subject to changes. Please also observe the further product documentation!

WAGO Kontakttechnik GmbH & Co. KG
Hansastr. 27
32423 Minden
Phone: +49571 887-0 | Fax: +49571 887-169
Email: info.de@wago.com | Web: www.wago.com

Do you have any questions about our products?
We are always happy to take your call at +49 (571) 887-44222.

Counterpart

Item no.769-112
1-conductor female plug; 4 mm²; 12-pole; 4,00 mm²; gray

www.wago.com/769-112

Item no.769-112/021-000
1-conductor female plug; Locking lever; 4 mm²; 12-pole; 4,00 mm²; gray

www.wago.com/769-112/021-000

Item no.769-132
2-conductor female connector; 4 mm²; 12-pole; 4,00 mm²; gray

www.wago.com/769-132

Compatible products

tools

Item no.: 210-490
Operating tool

www.wago.com/210-490

Item no.: 769-434
Push-button; loose

www.wago.com/769-434

Coding

Item no.: 769-435
Coding pin; for coding of female plugs; for carrier terminal blocks / male connectors; orange

www.wago.com/769-435

Insulation stop

Item no.: 769-470
Insulation stop; 0.08 - 0.2 mm² "s" (0.14 mm² "f-st"); 5 pieces/strip; white

www.wago.com/769-470

Subject to changes. Please also observe the further product documentation!

WAGO Kontakttechnik GmbH & Co. KG
Hansastr. 27
32423 Minden
Phone: +49571 887-0 | Fax: +49571 887-169
Email: info.de@wago.com | Web: www.wago.com

Do you have any questions about our products?
We are always happy to take your call at +49 (571) 887-44222.

	Item no.: 769-471 Insulation stop; 0.25 - 0.5 mm²; 5 pieces/strip; light gray	www.wago.com/769-471
	Item no.: 769-472 Insulation stop; 0.75 - 1 mm²; 5 pieces/strip; dark gray	www.wago.com/769-472

Marking accessories

	Item no.: 2009-145 Mini-WSB Inline; for Smart Printer; 1700 pieces on roll; stretchable 5 - 5.2 mm; plain; snap-on type; white	www.wago.com/2009-145
	Item no.: 2009-145/000-002 Mini-WSB Inline; for Smart Printer; 1700 pieces on roll; stretchable 5 - 5.2 mm; plain; snap-on type; white	www.wago.com/2009-145/000-002
	Item no.: 2009-145/000-005 Mini-WSB Inline; for Smart Printer; 1700 pieces on roll; stretchable 5 - 5.2 mm; plain; snap-on type; red	www.wago.com/2009-145/000-005
	Item no.: 2009-145/000-006 Mini-WSB Inline; for Smart Printer; 1700 pieces on roll; stretchable 5 - 5.2 mm; plain; snap-on type; blue	www.wago.com/2009-145/000-006
	Item no.: 2009-145/000-007 Mini-WSB Inline; for Smart Printer; 1700 pieces on roll; stretchable 5 - 5.2 mm; plain; snap-on type; white	www.wago.com/2009-145/000-007
	Item no.: 2009-145/000-012 Mini-WSB Inline; for Smart Printer; 1700 pieces on roll; stretchable 5 - 5.2 mm; plain; snap-on type; orange	www.wago.com/2009-145/000-012
	Item no.: 2009-145/000-023 Mini-WSB Inline; for Smart Printer; 1700 pieces on roll; stretchable 5 - 5.2 mm; plain; snap-on type; green	www.wago.com/2009-145/000-023
	Item no.: 2009-145/000-024 Mini-WSB Inline; for Smart Printer; 1700 pieces on roll; stretchable 5 - 5.2 mm; plain; snap-on type; violet	www.wago.com/2009-145/000-024
	Item no.: 210-831 Marking strips; on reel; 2.3 mm wide; plain; Self-adhesive; white	www.wago.com/210-831
	Item no.: 210-832 Marking strips; on reel; 3 mm wide; plain; Self-adhesive; white	www.wago.com/210-832
	Item no.: 210-833 Marking strips; on reel; 6 mm wide; plain; Self-adhesive; white	www.wago.com/210-833
	Item no.: 210-834 Marking strips; on reel; 5 mm wide; plain; Self-adhesive; white	www.wago.com/210-834
	Item no.: 248-501 Miniature WSB Quick marking system; plain; Marker width 5 mm; 10 strips with 10 markers per card	www.wago.com/248-501

Subject to changes. Please also observe the further product documentation!

WAGO Kontakttechnik GmbH & Co. KG
Hansastr. 27
32423 Minden
Phone: +49571 887-0 | Fax: +49571 887-169
Email: info.de@wago.com | Web: www.wago.com

Do you have any questions about our products?
We are always happy to take your call at +49 (571) 887-44222.

	Item no.: 248-501/000-002 Mini-WSB marking card; as card; not stretchable; plain; snap-on type; yellow	www.wago.com/248-501/000-002
	Item no.: 248-501/000-005 Mini-WSB marking card; as card; not stretchable; plain; snap-on type; red	www.wago.com/248-501/000-005
	Item no.: 248-501/000-006 Mini-WSB marking card; as card; not stretchable; plain; snap-on type; blue	www.wago.com/248-501/000-006
	Item no.: 248-501/000-007 Mini-WSB marking card; as card; not stretchable; plain; snap-on type; gray	www.wago.com/248-501/000-007
	Item no.: 248-501/000-012 Mini-WSB marking card; as card; not stretchable; plain; snap-on type; orange	www.wago.com/248-501/000-012
	Item no.: 248-501/000-017 Mini-WSB marking card; as card; not stretchable; plain; snap-on type; light green	www.wago.com/248-501/000-017
	Item no.: 248-501/000-023 Mini-WSB marking card; as card; not stretchable; plain; snap-on type; green	www.wago.com/248-501/000-023
	Item no.: 248-501/000-024 Mini-WSB marking card; as card; not stretchable; plain; snap-on type; violet	www.wago.com/248-501/000-024
Protective Warning Marker		
	Item no.: 280-415 Protective warning marker; with high-voltage symbol, black; for 5 terminal blocks; yellow	www.wago.com/280-415
Strain relief plate		
	Item no.: 769-410 Strain relief plate; gray	www.wago.com/769-410
	Item no.: 769-414 Strain relief plate; gray	www.wago.com/769-414
ferrule		
	Item no.: 216-101 Ferrule; Sleeve for 0.5 mm² / AWG 22; uninsulated; electro-tin plated	www.wago.com/216-101
	Item no.: 216-102 Ferrule; Sleeve for 0.75 mm² / AWG 20; uninsulated; electro-tin plated	www.wago.com/216-102
	Item no.: 216-103 Ferrule; Sleeve for 1 mm² / AWG 18; uninsulated; electro-tin plated	www.wago.com/216-103

Subject to changes. Please also observe the further product documentation!

WAGO Kontakttechnik GmbH & Co. KG
Hansastr. 27
32423 Minden
Phone: +49571 887-0 | Fax: +49571 887-169
Email: info.de@wago.com | Web: www.wago.com

Do you have any questions about our products?
We are always happy to take your call at +49 (571) 887-44222.

	Item no.: 216-104 Ferrule; Sleeve for 1.5 mm² / AWG 16; uninsulated; electro-tin plated	www.wago.com/216-104
	Item no.: 216-201 Ferrule; Sleeve for 0.5 mm² / 20 AWG; insulated; electro-tin plated; white	www.wago.com/216-201
	Item no.: 216-202 Ferrule; Sleeve for 0.75 mm² / 18 AWG; insulated; electro-tin plated; gray	www.wago.com/216-202
	Item no.: 216-203 Ferrule; Sleeve for 1 mm² / AWG 18; insulated; electro-tin plated; red	www.wago.com/216-203
	Item no.: 216-204 Ferrule; Sleeve for 1.5 mm² / AWG 16; insulated; electro-tin plated; black	www.wago.com/216-204
	Item no.: 216-206 Ferrule; Sleeve for 2.5 mm² / AWG 14; insulated; electro-tin plated; blue	www.wago.com/216-206
Female plug		
	Item no.: 769-101 1-conductor female plug; 4 mm²; 1-pole; 4,00 mm²; gray	www.wago.com/769-101
	Item no.: 769-101/000-016 1-conductor female plug; 4 mm²; 1-pole; 4,00 mm²; green-yellow	www.wago.com/769-101 /000-016
	Item no.: 769-102 1-conductor female plug; 4 mm²; 2-pole; 4,00 mm²; gray	www.wago.com/769-102
	Item no.: 769-102/000-036 1-conductor female plug; 4 mm²; 2-pole; 4,00 mm²; gray, green-yellow	www.wago.com/769-102 /000-036
	Item no.: 769-102/000-037 1-conductor female plug; 4 mm²; 2-pole; 4,00 mm²; green-yellow, gray	www.wago.com/769-102 /000-037
	Item no.: 769-103 1-conductor female plug; 4 mm²; 3-pole; 4,00 mm²; gray	www.wago.com/769-103
	Item no.: 769-103/000-036 1-conductor female plug; 4 mm²; 3-pole; 4,00 mm²; gray, green-yellow	www.wago.com/769-103 /000-036
	Item no.: 769-103/000-037 1-conductor female plug; 4 mm²; 3-pole; 4,00 mm²; green-yellow, gray	www.wago.com/769-103 /000-037
	Item no.: 769-103/000-038 1-conductor female plug; 4 mm²; 3-pole; 4,00 mm²; gray, blue, green-yellow	www.wago.com/769-103 /000-038

Subject to changes. Please also observe the further product documentation!

WAGO Kontakttechnik GmbH & Co. KG
Hansastr. 27
32423 Minden
Phone: +49571 887-0 | Fax: +49571 887-169
Email: info.de@wago.com | Web: www.wago.com

Do you have any questions about our products?
We are always happy to take your call at +49 (571) 887-44222.

	Item no.: 769-103/000-039 1-conductor female plug; 4 mm²; 3-pole; 4,00 mm²; green-yellow, blue, gray	www.wago.com/769-103/000-039
	Item no.: 769-104 1-conductor female plug; 4 mm²; 4-pole; 4,00 mm²; gray	www.wago.com/769-104
	Item no.: 769-104/000-036 1-conductor female plug; 4 mm²; 4-pole; 4,00 mm²; gray, green-yellow	www.wago.com/769-104/000-036
	Item no.: 769-104/000-037 1-conductor female plug; 4 mm²; 4-pole; 4,00 mm²; green-yellow, gray	www.wago.com/769-104/000-037
	Item no.: 769-104/000-038 1-conductor female plug; 4 mm²; 4-pole; 4,00 mm²; gray, blue, green-yellow	www.wago.com/769-104/000-038
	Item no.: 769-104/000-039 1-conductor female plug; 4 mm²; 4-pole; 4,00 mm²; green-yellow, blue, gray	www.wago.com/769-104/000-039
	Item no.: 769-105 1-conductor female plug; 4 mm²; 5-pole; 4,00 mm²; gray	www.wago.com/769-105
	Item no.: 769-105/000-036 1-conductor female plug; 4 mm²; 5-pole; 4,00 mm²; gray, green-yellow	www.wago.com/769-105/000-036
	Item no.: 769-105/000-037 1-conductor female plug; 4 mm²; 5-pole; 4,00 mm²; green-yellow, gray	www.wago.com/769-105/000-037
	Item no.: 769-105/000-038 1-conductor female plug; 4 mm²; 5-pole; 4,00 mm²; gray, blue, green-yellow	www.wago.com/769-105/000-038
	Item no.: 769-105/000-039 1-conductor female plug; 4 mm²; 5-pole; 4,00 mm²; green-yellow, blue, gray	www.wago.com/769-105/000-039
	Item no.: 769-106 1-conductor female plug; 4 mm²; 6-pole; 4,00 mm²; gray	www.wago.com/769-106
	Item no.: 769-106/000-006 1-conductor female plug; 4 mm²; 6-pole; 4,00 mm²; blue	www.wago.com/769-106/000-006
	Item no.: 769-106/000-036 1-conductor female plug; 4 mm²; 6-pole; 4,00 mm²; gray, green-yellow	www.wago.com/769-106/000-036

Subject to changes. Please also observe the further product documentation!

WAGO Kontakttechnik GmbH & Co. KG
Hansastr. 27
32423 Minden
Phone: +49571 887-0 | Fax: +49571 887-169
Email: info.de@wago.com | Web: www.wago.com

Do you have any questions about our products?
We are always happy to take your call at +49 (571) 887-44222.

	Item no.: 769-106/000-037 1-conductor female plug; 4 mm²; 6-pole; 4,00 mm²; green-yellow, gray	www.wago.com/769-106/000-037
	Item no.: 769-106/000-038 1-conductor female plug; 4 mm²; 6-pole; 4,00 mm²; gray, blue, green-yellow	www.wago.com/769-106/000-038
	Item no.: 769-106/000-039 1-conductor female plug; 4 mm²; 6-pole; 4,00 mm²; green-yellow, blue, gray	www.wago.com/769-106/000-039
	Item no.: 769-107 1-conductor female plug; 4 mm²; 7-pole; 4,00 mm²; gray	www.wago.com/769-107
	Item no.: 769-107/000-036 1-conductor female plug; 4 mm²; 7-pole; 4,00 mm²; gray, green-yellow	www.wago.com/769-107/000-036
	Item no.: 769-107/000-037 1-conductor female plug; 4 mm²; 7-pole; 4,00 mm²; green-yellow, gray	www.wago.com/769-107/000-037
	Item no.: 769-107/000-038 1-conductor female plug; 4 mm²; 7-pole; 4,00 mm²; gray, blue, green-yellow	www.wago.com/769-107/000-038
	Item no.: 769-107/000-039 1-conductor female plug; 4 mm²; 7-pole; 4,00 mm²; green-yellow, blue, gray	www.wago.com/769-107/000-039
	Item no.: 769-108 1-conductor female plug; 4 mm²; 8-pole; 4,00 mm²; gray	www.wago.com/769-108
	Item no.: 769-108/000-036 1-conductor female plug; 4 mm²; 8-pole; 4,00 mm²; gray, green-yellow	www.wago.com/769-108/000-036
	Item no.: 769-108/000-037 1-conductor female plug; 4 mm²; 8-pole; 4,00 mm²; green-yellow, gray	www.wago.com/769-108/000-037
	Item no.: 769-108/000-038 1-conductor female plug; 4 mm²; 8-pole; 4,00 mm²; gray, blue, green-yellow	www.wago.com/769-108/000-038
	Item no.: 769-108/000-039 1-conductor female plug; 4 mm²; 8-pole; 4,00 mm²; green-yellow, blue, gray	www.wago.com/769-108/000-039
	Item no.: 769-109 1-conductor female plug; 4 mm²; 9-pole; 4,00 mm²; gray	www.wago.com/769-109

Subject to changes. Please also observe the further product documentation!

WAGO Kontakttechnik GmbH & Co. KG
Hansastr. 27
32423 Minden
Phone: +49571 887-0 | Fax: +49571 887-169
Email: info.de@wago.com | Web: www.wago.com

Do you have any questions about our products?
We are always happy to take your call at +49 (571) 887-44222.

	Item no.: 769-109/000-036 1-conductor female plug; 4 mm²; 9-pole; 4,00 mm²; gray, green-yellow	www.wago.com/769-109/000-036
	Item no.: 769-109/000-037 1-conductor female plug; 4 mm²; 9-pole; 4,00 mm²; green-yellow, gray	www.wago.com/769-109/000-037
	Item no.: 769-109/000-038 1-conductor female plug; 4 mm²; 9-pole; 4,00 mm²; gray, blue, green-yellow	www.wago.com/769-109/000-038
	Item no.: 769-109/000-039 1-conductor female plug; 4 mm²; 9-pole; 4,00 mm²; green-yellow, blue, gray	www.wago.com/769-109/000-039
	Item no.: 769-110 1-conductor female plug; 4 mm²; 10-pole; 4,00 mm²; gray	www.wago.com/769-110
	Item no.: 769-110/000-036 1-conductor female plug; 4 mm²; 10-pole; 4,00 mm²; gray, green-yellow	www.wago.com/769-110/000-036
	Item no.: 769-110/000-037 1-conductor female plug; 4 mm²; 10-pole; 4,00 mm²; green-yellow, gray	www.wago.com/769-110/000-037
	Item no.: 769-110/000-038 1-conductor female plug; 4 mm²; 10-pole; 4,00 mm²; gray, blue, green-yellow	www.wago.com/769-110/000-038
	Item no.: 769-110/000-039 1-conductor female plug; 4 mm²; 10-pole; 4,00 mm²; green-yellow, blue, gray	www.wago.com/769-110/000-039
	Item no.: 769-111 1-conductor female plug; 4 mm²; 11-pole; 4,00 mm²; gray	www.wago.com/769-111
	Item no.: 769-111/000-036 1-conductor female plug; 4 mm²; 11-pole; 4,00 mm²; gray, green-yellow	www.wago.com/769-111/000-036
	Item no.: 769-111/000-037 1-conductor female plug; 4 mm²; 11-pole; 4,00 mm²; green-yellow, gray	www.wago.com/769-111/000-037
	Item no.: 769-111/000-038 1-conductor female plug; 4 mm²; 11-pole; 4,00 mm²; gray, blue, green-yellow	www.wago.com/769-111/000-038
	Item no.: 769-111/000-039 1-conductor female plug; 4 mm²; 11-pole; 4,00 mm²; green-yellow, blue, gray	www.wago.com/769-111/000-039

Subject to changes. Please also observe the further product documentation!

WAGO Kontakttechnik GmbH & Co. KG
Hansastr. 27
32423 Minden
Phone: +49571 887-0 | Fax: +49571 887-169
Email: info.de@wago.com | Web: www.wago.com

Do you have any questions about our products?
We are always happy to take your call at +49 (571) 887-44222.

	Item no.: 769-112/000-036 1-conductor female plug; 4 mm²; 12-pole; 4,00 mm²; gray, green-yellow	www.wago.com/769-112/000-036
	Item no.: 769-112/000-037 1-conductor female plug; 4 mm²; 12-pole; 4,00 mm2; green-yellow, gray	www.wago.com/769-112/000-037
	Item no.: 769-112/000-038 1-conductor female plug; 4 mm²; 12-pole; 4,00 mm²; gray, blue, green-yellow	www.wago.com/769-112/000-038
	Item no.: 769-112/000-039 1-conductor female plug; 4 mm²; 12-pole; 4,00 mm²; green-yellow, blue, gray	www.wago.com/769-112/000-039
	Item no.: 769-121 2-conductor female connector; 4 mm²; 1-pole; 4,00 mm²; gray	www.wago.com/769-121
	Item no.: 769-122 2-conductor female connector; 4 mm²; 2-pole; 4,00 mm²; gray	www.wago.com/769-122
	Item no.: 769-123 2-conductor female connector; 4 mm²; 3-pole; 4,00 mm²; gray	www.wago.com/769-123
	Item no.: 769-124 2-conductor female connector; 4 mm²; 4-pole; 4,00 mm²; gray	www.wago.com/769-124
	Item no.: 769-125 2-conductor female connector; 4 mm²; 5-pole; 4,00 mm²; gray	www.wago.com/769-125
	Item no.: 769-126 2-conductor female connector; 4 mm²; 6-pole; 4,00 mm²; gray	www.wago.com/769-126
	Item no.: 769-127 2-conductor female connector; 4 mm²; 7-pole; 4,00 mm²; gray	www.wago.com/769-127
	Item no.: 769-128 2-conductor female connector; 4 mm²; 8-pole; 4,00 mm²; gray	www.wago.com/769-128
	Item no.: 769-129 2-conductor female connector; 4 mm²; 9-pole; 4,00 mm²; gray	www.wago.com/769-129
	Item no.: 769-130 2-conductor female connector; 4 mm²; 10-pole; 4,00 mm²; gray	www.wago.com/769-130
	Item no.: 769-131 2-conductor female connector; 4 mm²; 11-pole; 4,00 mm²; gray	www.wago.com/769-131
assembling		
	Item no.: 769-499 Fixing screw M2.5 x 16; and hexagon nut M2.5	www.wago.com/769-499

Subject to changes. Please also observe the further product documentation!

WAGO Kontakttechnik GmbH & Co. KG
Hansastr. 27
32423 Minden
Phone: +49571 887-0 | Fax: +49571 887-169
Email: info.de@wago.com | Web: www.wago.com

Do you have any questions about our products?
We are always happy to take your call at +49 (571) 887-44222.

Downloads

Documentation

Bid Text

769-612/002-000 GAEB X81 - Datei	Feb 19, 2019	xml 3.3 kB	Download
769-612/002-000 doc - Datei	Oct 4, 2017	doc 25.6 kB	Download

Additional Information

Technical explanations	Apr 3, 2019	pdf 2.1 MB	Download

CAD/CAE-Data

CAD data

2D/3D Models 769-612/002-000	URL	Download

CAE data

EPLAN Data Portal 769-612/002-000	URL	Download
WSCAD Universe 769-612/002-000	URL	Download

Installation Notes

Assembly

Subject to changes. Please also observe the further product documentation!

WAGO Kontakttechnik GmbH & Co. KG
Hansastr. 27
32423 Minden
Phone: +49571 887-0 | Fax: +49571 887-169
Email: info.de@wago.com | Web: www.wago.com

Do you have any questions about our products?
We are always happy to take your call at +49 (571) 887-44222.

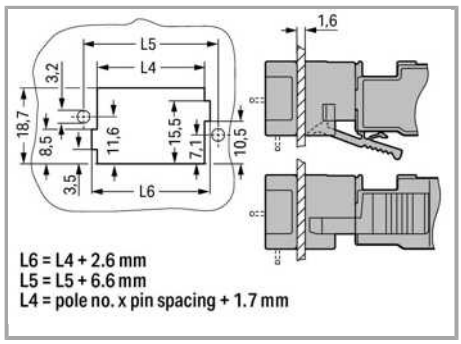

Cutout

Male headers with solder pins and fixing flanges

Inserting a conductor

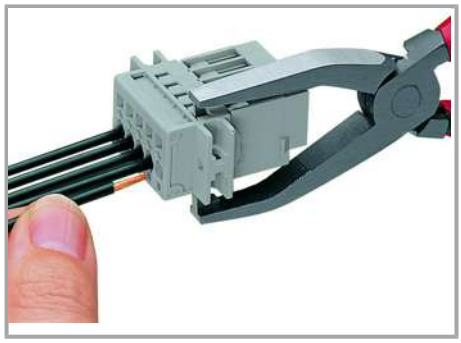

Operating tool

Inserting a conductor via operating tool (example shows a male connector).

Application

WAGO Kontakttechnik GmbH & Co. KG
Hansastr. 27
32423 Minden
Phone: +49571 887-0 | Fax: +49571 887-169
Email: info.de@wago.com | Web: www.wago.com

Do you have any questions about our products?
We are always happy to take your call at +49 (571) 887-44222.

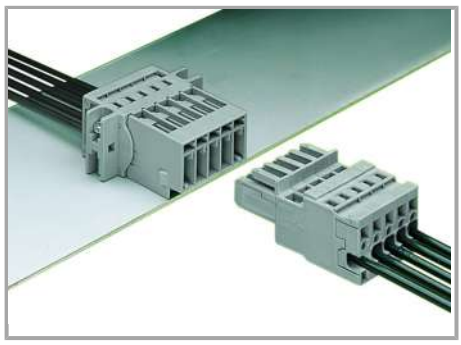

Male connector with CAGE CLAMP® and mounting flanges

1-connector female plug, straight

Marking

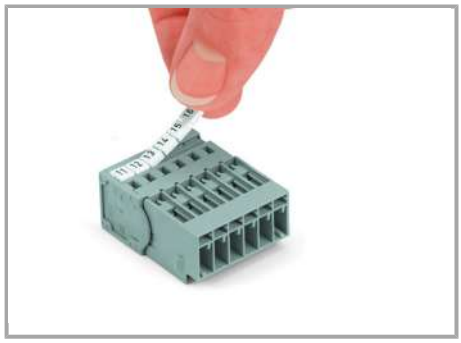

Labeling a male connector with CAGE CLAMP® connection via Mini-WSB quick markers.

Product family

X-COM
Show all products from the family

Subject to changes. Please also observe the further product documentation!

WAGO Kontakttechnik GmbH & Co. KG
Hansastr. 27
32423 Minden
Phone: +49571 887-0 | Fax: +49571 887-169
Email: info.de@wago.com | Web: www.wago.com

Do you have any questions about our products?
We are always happy to take your call at +49 (571) 887-44222.