Data sheet | Item number: 770-1615

T-distribution connector; 2-pole; Cod. A; 1 input; 2 outputs; 3 locking levers; for flying leads; black

www.wago.com/770-1615

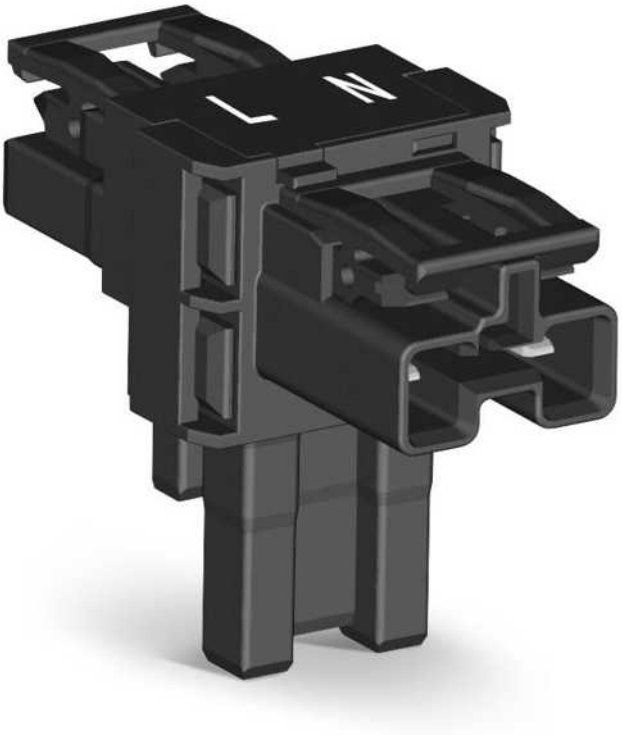

RoHS Compliant ✓ BOMcheck.net Color: ■

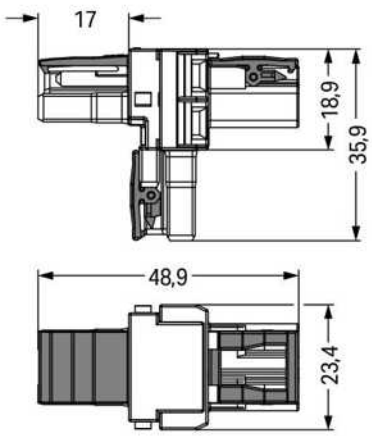

Item description

- Protected against mismating and maintenance-free

Note:
All connectors for mounted installations (snap-in versions for lighting fixtures or devices, all types of PCB and distribution connectors) are factory-equipped with locking levers to ensure plugs and sockets are securely locked. Additional locking levers are only required for flying leads (plug /socket).
Note on mismating protection:

Subject to changes. Please also observe the further product documentation!

WAGO Kontakttechnik GmbH & Co. KG
Hansastr. 27
32423 Minden
Phone: +49571 887-0 | Fax: +49571 887-169
Email: info.de@wago.com | Web: www.wago.com

Do you have any questions about our products?
We are always happy to take your call at +49 (571) 887-44222.

All WINSTA® components are 100% protected against mismating when:
a.) plugging different numbers of poles
b.) plugging while rotated 180
c.) plugging while laterally staggered
d.) plugging one pole
Safety information 1:
Application note for the U.S. market (USR): Some versions may also be used for current interruption in accordance with the UL certificate in select applications with currents below 16 A and voltages up to 600 V. For further information, please contact your local sales office.

Data

Electrical data

Note on Contact Resistance	approx. 1 mΩ of contact resistance approx. 0.25 mΩ contact transition plug/socket

Ratings per IEC/EN 60664-1

Ratings per	IEC/EN 60664-1
Rated voltage (III / 3)	250 V
Rated impulse voltage (III / 3)	4 kV
Rated current	25 A
Legend (ratings)	(III / 3) ≙ Overvoltage category III / Pollution degree 3

Approvals per UL 1977

Rated voltage per UL 1977 (factory wiring only)	600 V
Rated current per UL 1977 (factory wiring only)	23 A

Connection data

No. of poles	2
Total number of potentials	2

Geometrical Data

Pin spacing	10 mm / 0.394 inch
Width	23,5 mm / 0.925 inch
Height	36,1 mm / 1.421 inch
Depth	48,9 mm / 1.925 inch

Mechanical data

Coding	A

Subject to changes. Please also observe the further product documentation!

WAGO Kontakttechnik GmbH & Co. KG
Hansastr. 27
32423 Minden
Phone: +49571 887-0 | Fax: +49571 887-169
Email: info.de@wago.com | Web: www.wago.com

Do you have any questions about our products?
We are always happy to take your call at +49 (571) 887-44222.

Mating force of a plug-in connection	approx. 20 … 70 N (depending on pole number)
Retention force of a plug-in connection	When locked: > 80 N
Unmating force of a plug-in connection	when unlocked: approx. 20 … 70 N (depending on pole number)
Number of mating cycles	200, without resistive load 100, with resistive load I_N = 25 A, tested (4 mm²/AWG 12)
Type of distribution connector	T-distribution connector
Marking	L N
Protection class	IP20
Note on protection class	Only when mated (these compact connectors are not designed for use in open, easily accessible areas).
Potential marking	L N
Application	General mains applications
Suitable	for flying leads

Plug connection

Contact type (pluggable connector)	Socket/plug
Mismating protection	Yes
Locking of plug-in connection	locking lever
Locking lever	yes

Material Data

Color	black
Insulating material	Polyamide 66 (PA 66)
Contact material	Copper or copper alloy (surface-treated)
Fire load	0.236 MJ
Weight	11.5 g

Environmental Requirements

Processing temperature	-5 … +40 °C
Continuous operating temperature	-35 … +85 °C
Note on Continuous Service Temperature	Insulating parts for temperatures ≤ 105 °C

Commercial data

Product Group	20 (WINSTA)
Packaging type	BOX
Country of origin	DE
GTIN	4050821531180

Subject to changes. Please also observe the further product documentation!

WAGO Kontakttechnik GmbH & Co. KG
Hansastr. 27
32423 Minden
Phone: +49571 887-0 | Fax: +49571 887-169
Email: info.de@wago.com | Web: www.wago.com

Do you have any questions about our products?
We are always happy to take your call at +49 (571) 887-44222.

Customs Tariff No.	85366990990

Approvals / Certificates

UL-Approvals

Logo	Approval	Additional Approval Text	Certificate name
	cURus Underwriters Laboratories Inc.	UL 1977	E45171 Sec. 9

Counterpart

	Item no.770-102/041-000 Socket; with strain relief housing; 2-pole; Cod. A; 4,00 mm²; black	www.wago.com/770-102/041-000
	Item no.770-112/041-000 Plug; with strain relief housing; 2-pole; Cod. A; 4,00 mm²; black	www.wago.com/770-112/041-000
	Item no.770-212 Plug; 2-pole; Cod. A; 4,00 mm²; black	www.wago.com/770-212
	Item no.770-202 Socket; 2-pole; Cod. A; 4,00 mm²; black	www.wago.com/770-202
	Item no.771-8992/006-101 pre-assembled interconnecting cable; Eca; Socket/plug; 2-pole; Cod. A; H05VV-F 2 x 1.5 mm²; 1 m; 1,50 mm²; black	www.wago.com/771-8992/006-101
	Item no.771-8992/106-101 pre-assembled connecting cable; Eca; Socket/open-ended; 2-pole; Cod. A; H05VV-F 2 x 1.5 mm²; 1 m; 1,50 mm²; black	www.wago.com/771-8992/106-101
	Item no.771-8992/206-101 pre-assembled connecting cable; Eca; Plug/open-ended; 2-pole; Cod. A; H05VV-F 2 x 1.5 mm²; 1 m; 1,50 mm²; black	www.wago.com/771-8992/206-101

Compatible products

protection

	Item no.: 770-201 Lockout cap; 12-pole, separable; 12-pole; for sockets; black	www.wago.com/770-201
	Item no.: 770-221 Lockout cap; for socket; 12-pole; separable; white	www.wago.com/770-221
	Item no.: 770-360 Lockout cap; for plugs; 5-pole; separable; yellow	www.wago.com/770-360

Subject to changes. Please also observe the further product documentation!

WAGO Kontakttechnik GmbH & Co. KG
Hansastr. 27
32423 Minden
Phone: +49571 887-0 | Fax: +49571 887-169
Email: info.de@wago.com | Web: www.wago.com

Do you have any questions about our products?
We are always happy to take your call at +49 (571) 887-44222.

Downloads

Documentation

Bid Text

770-1615 GAEB X81 - Datei	Feb 19, 2019	xml 2.9 kB	Download
770-1615 doc - Datei	Mar 12, 2015	doc 23.0 kB	Download

CAD/CAE-Data

CAE data

WSCAD Universe 770-1615	URL	Download

Installation Notes

Installation

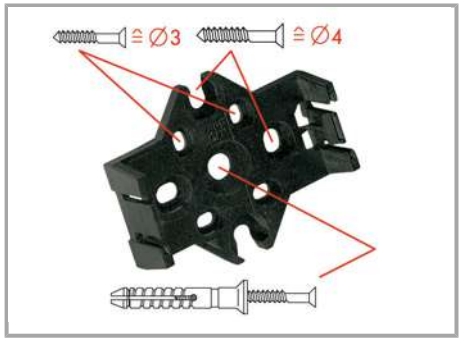

The mounting plate for distribution connectors can be mounted using commercially available screws or nail-drive anchors.

The distribution connectors are latched when mounted on the mounting plate.

To release the distribution connector, unlock the latch using a screwdriver.

Subject to changes. Please also observe the further product documentation!

WAGO Kontakttechnik GmbH & Co. KG
Hansastr. 27
32423 Minden
Phone: +49571 887-0 | Fax: +49571 887-169
Email: info.de@wago.com | Web: www.wago.com

Do you have any questions about our products?
We are always happy to take your call at +49 (571) 887-44222.

All distributor connections are locked and protected against accidental disconnection directly after mating. Locking of any connection is released using a screwdriver, even if all connections are in use.

Product family

WINSTA® MIDI
Show all products from the family

Subject to changes. Please also observe the further product documentation!

WAGO Kontakttechnik GmbH & Co. KG
Hansastr. 27
32423 Minden
Phone: +49571 887-0 | Fax: +49571 887-169
Email: info.de@wago.com | Web: www.wago.com

Do you have any questions about our products?
We are always happy to take your call at +49 (571) 887-44222.