Distribution box; Two-way circuit; 1 input; 5 lights; 2 switches; Coding A + S

www.wago.com/770-631_307-000

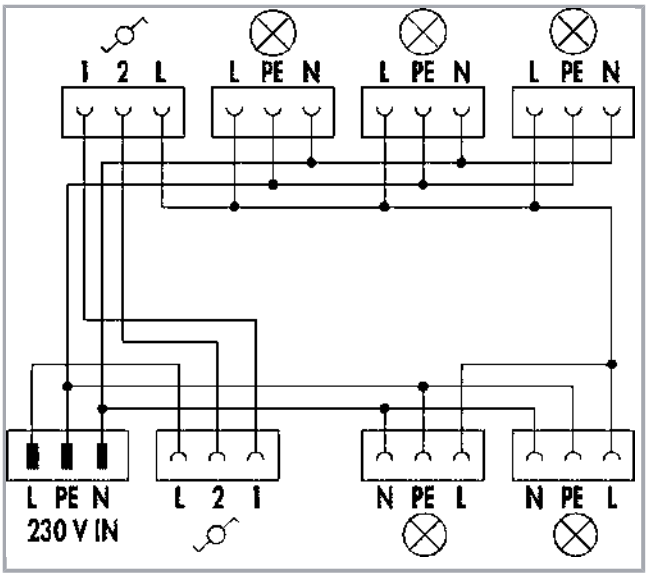

Subject to changes. Please also observe the further product documentation!

WAGO Kontakttechnik GmbH & Co. KG
Hansastr. 27
32423 Minden
Phone: +49571 887-0 | Fax: +49571 887-169
Email: info.de@wago.com | Web: www.wago.com

Do you have any questions about our products?
We are always happy to take your call at +49 (571) 887-44222.

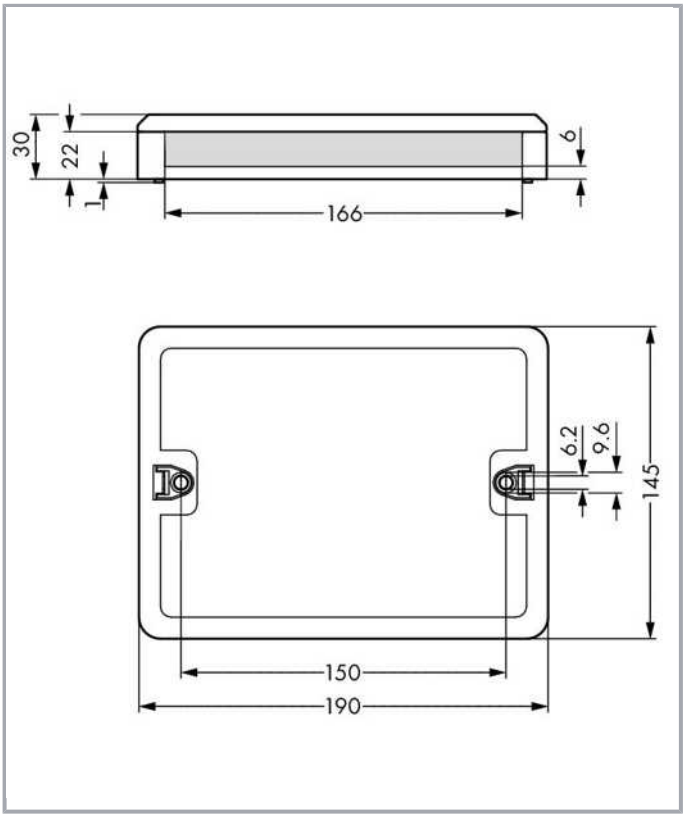

Item description

Note on mismating protection:

All WINSTA® components are 100% protected against mismating in terms of:
a.) plugging different number of poles
b.) plugging when turned by 180°
c.) plugging when laterally staggered
d.) plugging one pole

Data

Counterpart

Installation Notes

Installation

Subject to changes. Please also observe the further product documentation!

WAGO Kontakttechnik GmbH & Co. KG
Hansastr. 27
32423 Minden
Phone: +49571 887-0 | Fax: +49571 887-169
Email: info.de@wago.com | Web: www.wago.com

Do you have any questions about our products?
We are always happy to take your call at +49 (571) 887-44222.

Securing the mounting plate with WINSTA® Distribution Box to the wall (e.g., via stud gun).

Subject to changes. Please also observe the further product documentation!

WAGO Kontakttechnik GmbH & Co. KG
Hansastr. 27
32423 Minden
Phone: +49571 887-0 | Fax: +49571 887-169
Email: info.de@wago.com | Web: www.wago.com

Do you have any questions about our products?
We are always happy to take your call at +49 (571) 887-44222.