Plug for PCBs; angled; 3-pole; Cod. A; black

www.wago.com/770-813_011-000

RoHS ✓ Compliant

BOMcheck.net

Color: ■

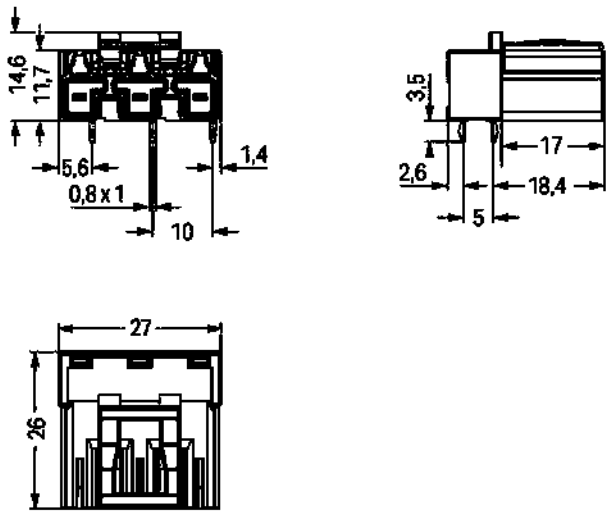

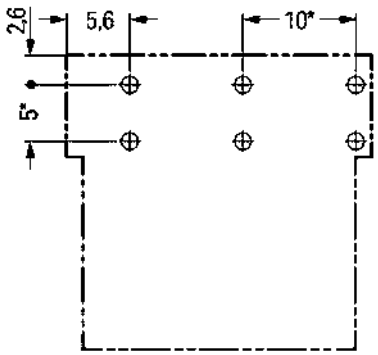

* ± 0.05 mm
Drilled hole diameter: $1.5^{+0.1}$ mm

Item description

- Protected against mismating and maintenance-free
- Push-in CAGE CLAMP® spring pressure connection technology allows solid conductors to be simply pushed into a unit

Subject to changes. Please also observe the further product documentation!

WAGO Kontakttechnik GmbH & Co. KG
Hansastr. 27
32423 Minden
Phone: +49571 887-0 | Fax: +49571 887-169
Email: info.de@wago.com | Web: www.wago.com

Do you have any questions about our products?
We are always happy to take your call at +49 (571) 887-44222.

- Two-wire connection per pole for loops or bridges
- Additional variable coding is possible

Note:
All connectors for mounted installations (snap-in versions for lighting fixtures or devices, all types of PCB and distribution connectors) are factory-equipped with locking levers to ensure plugs and sockets are securely locked. Additional locking levers are only required for flying leads (plug /socket).
Note on mismating protection:
All WINSTA® components are 100% protected against mismating when:
a.) plugging different numbers of poles
b.) plugging while rotated 180
c.) plugging while laterally staggered
d.) plugging one pole
Safety information 1:
Application note for the U.S. market (USR): Some versions may also be used for current interruption in accordance with the UL certificate in select applications with currents below 16 A and voltages up to 600 V. For further information, please contact your local sales office.

Data
Electrical data

Note on Contact Resistance	approx. 1 mΩ of contact resistance approx. 0.25 mΩ contact transition plug/socket

Ratings per IEC/EN 60664-1

Ratings per	IEC/EN 60664-1
Rated voltage (III / 3)	250 V
Rated impulse voltage (III / 3)	4 kV
Rated current	25 A
Legend (ratings)	(III / 3) ≙ Overvoltage category III / Pollution degree 3

Approvals per UL 1977

Rated voltage per UL 1977 (factory wiring only)	600 V
Rated current per UL 1977 (factory wiring only)	23 A

Connection data

No. of poles	3
Total number of potentials	3
Number of levels	1
Ground function	with preceding ground contact

Subject to changes. Please also observe the further product documentation!

WAGO Kontakttechnik GmbH & Co. KG
Hansastr. 27
32423 Minden
Phone: +49571 887-0 | Fax: +49571 887-169
Email: info.de@wago.com | Web: www.wago.com

Do you have any questions about our products?
We are always happy to take your call at +49 (571) 887-44222.

Geometrical Data

Pin spacing	10 mm / 0.394 inch
Width	27 mm / 1.063 inch
Height	18,1 mm / 0.713 inch
Height from the surface	14,6 mm / 0.575 inch
Depth	26 mm / 1.024 inch
Solder pin length	3.5 mm
Solder pin dimensions	1 x 0,8 mm
Drilled hole diameter (tolerance)	$1{,}5^{(-0{,}1\ \ldots\ +0{,}1)}$ mm

Mechanical data

Coding	A
Mating force of a plug-in connection	approx. 20 … 70 N (depending on pole number)
Retention force of a plug-in connection	Locked: > 80 N
Unmating force of a plug-in connection	Unlocked: approx. 20 … 70 N (depending on pole number)
Number of mating cycles	200, without resistive load 100, with resistive load I_N = 25 A, tested (4 mm²/AWG 12)
Design	angled
Marking	L N
Potential marking	L N
Application	General mains applications

Plug connection

Contact type (pluggable connector)	Male connector/plug
Connector connection type	for PCB
Mismating protection	Yes
Mating direction to the PCB	0 °
Locking of plug-in connection	locking lever
Locking lever	yes

PCB contact

PCB contact	THT
Solder pin arrangement	2 in-line solder pins/pole

Subject to changes. Please also observe the further product documentation!

WAGO Kontakttechnik GmbH & Co. KG
Hansastr. 27
32423 Minden
Phone: +49571 887-0 | Fax: +49571 887-169
Email: info.de@wago.com | Web: www.wago.com

Do you have any questions about our products?
We are always happy to take your call at +49 (571) 887-44222.

Number of solder pins per potential	2

Material Data

Color	black
Insulating material	Polyamide 66 (PA 66)
Clamping spring material	Chrome nickel spring steel (CrNi)
Contact material	Copper or copper alloy (surface-treated)
Fire load	0.146 MJ
Weight	6.6 g

Environmental Requirements

Processing temperature	-5 … +40 °C
Continuous operating temperature	-35 … +85 °C
Note on Continuous Service Temperature	Insulating parts for temperatures ≤ 105 °C

Commercial data

Packaging type	BOX
Country of origin	PL
GTIN	4044918524551
Customs Tariff No.	85366990990

Approvals / Certificates

Country specific Approvals

Logo	Approval	Additional Approval Text	Certificate name
	CCA DEKRA Certification B.V.	EN 61535	2173495.02

Ship Approvals

Logo	Approval	Additional Approval Text	Certificate name
	ABS American Bureau of Shipping	-	19-HG1868589-PDA
	DNV GL Det Norske Veritas, Germanischer Lloyd	-	TAE00001Z6

Subject to changes. Please also observe the further product documentation!

WAGO Kontakttechnik GmbH & Co. KG
Hansastr. 27
32423 Minden
Phone: +49571 887-0 | Fax: +49571 887-169
Email: info.de@wago.com | Web: www.wago.com

Do you have any questions about our products?
We are always happy to take your call at +49 (571) 887-44222.

	LR Lloyds Register	IEC 61984	02/20050 (E6)

UL-Approvals

Logo	Approval	Additional Approval Text	Certificate name
	cURus Underwriters Laboratories Inc.	UL 1977	E45171 Sec. 9

Counterpart

	Item no.770-103 Socket; with strain relief housing; 3-pole; Cod. A; 4,00 mm²; black	www.wago.com/770-103
	Item no.770-203 Socket; 3-pole; Cod. A; 4,00 mm²; black	www.wago.com/770-203
	Item no.770-203/035-000 Socket; with strain relief housing; 3-pole; Cod. A; 4,00 mm²; black	www.wago.com/770-203/035-000
	Item no.771-9993/006-101 pre-assembled interconnecting cable; Eca; Socket/plug; 3-pole; Cod. A; H05VV-F 3G 1.5 mm²; 1 m; 1,50 mm²; black	www.wago.com/771-9993/006-101
	Item no.771-9993/106-101 pre-assembled connecting cable; Eca; Socket/open-ended; 3-pole; Cod. A; H05VV-F 3G 1.5 mm²; 1 m; 1,50 mm²; black	www.wago.com/771-9993/106-101

Compatible products

Coding

	Item no.: 770-401 Coding pin; for plugs; Plastic; gray	www.wago.com/770-401

protection

	Item no.: 770-360 Lockout cap; for plugs; 5-pole; separable; yellow	www.wago.com/770-360

Subject to changes. Please also observe the further product documentation!

WAGO Kontakttechnik GmbH & Co. KG
Hansastr. 27
32423 Minden
Phone: +49571 887-0 | Fax: +49571 887-169
Email: info.de@wago.com | Web: www.wago.com

Do you have any questions about our products?
We are always happy to take your call at +49 (571) 887-44222.

Downloads

CAD/CAE-Data

CAD data

2D/3D Models 770-813/011-000	URL	Download

CAE data

EPLAN Data Portal 770-813/011-000	URL	Download

PCB Design

Symbol and Footprint 770-813/011-000	URL	Download

CAx data for your PCB design, consisting of "schematic symbols and PCB footprints", allow easy integration of the WAGO component into your development environment.

Supported formats:

- Accel EDA 14 & 15
- Altium 6 to current version
- Cadence Allegro
- DesignSpark
- Eagle Libraries
- KiCad
- Mentor Graphics BoardStation
- Mentor Graphics Design Architect
- Mentor Graphics Design Expedition 99 and 2000
- OrCAD 9.X PCB and Capture
- PADS PowerPCB 3, 3.5, 4.X, and 5.X
- PADS PowerPCB and PowerLogic 3.0
- PCAD 2000, 2001, 2002, 2004, and 2006
- Pulsonix 8.5 or newer
- STL
- 3D STEP
- TARGET 3001!
- View Logic ViewDraw
- Quadcept

Subject to changes. Please also observe the further product documentation!

WAGO Kontakttechnik GmbH & Co. KG
Hansastr. 27
32423 Minden
Phone: +49571 887-0 | Fax: +49571 887-169
Email: info.de@wago.com | Web: www.wago.com

Do you have any questions about our products?
We are always happy to take your call at +49 (571) 887-44222.

- Zuken CadStar 3 and 4
- Zuken CR-5000 and CR-8000

PCB Component Libraries (EDA), PCB CAD Library Ultra Librarian

Installation Notes

Product family

WINSTA® MIDI
Show all products from the family

Subject to changes. Please also observe the further product documentation!

WAGO Kontakttechnik GmbH & Co. KG
Hansastr. 27
32423 Minden
Phone: +49571 887-0 | Fax: +49571 887-169
Email: info.de@wago.com | Web: www.wago.com

Do you have any questions about our products?
We are always happy to take your call at +49 (571) 887-44222.