Data sheet | Item number: 788-936

Basic relay; Nominal input voltage: 24 VDC; 2 changeover contacts; Limiting continuous current: 8 A; with manual operation; Module width: 13 mm

www.wago.com/788-936

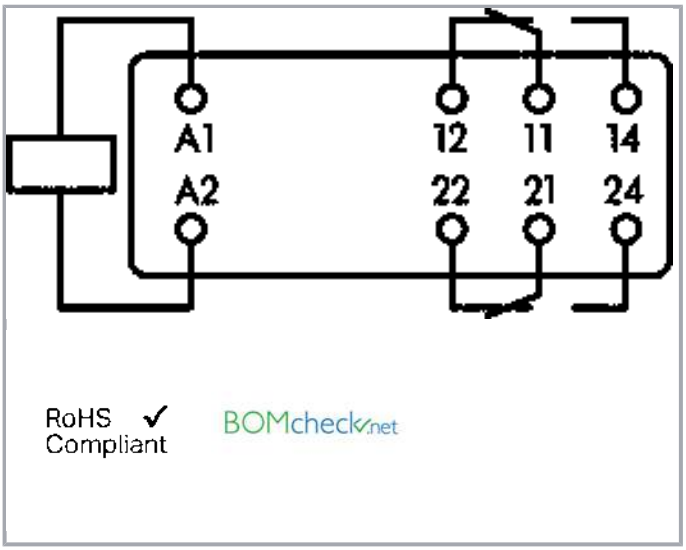

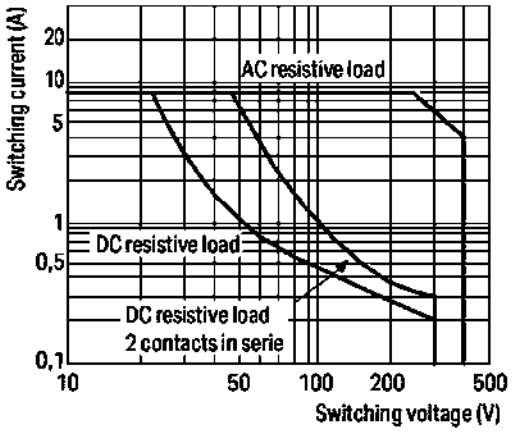

Load limit curve

Data

Technical Data

Control circuit

Nominal input voltage U_N	DC 24 V

Load circuit:

Number of changeover/switchover contacts	2
Contact material (relay)	AgNi
Limiting continuous current	8 A
Max. make current (resistive)	(AC) 12 A
Max. switching voltage	AC 250 V
Max. switching power (resistive)	AC 2000 VA; DC see load limit curve
Switching capacity	AC-15: 1.5 A / AC 240 V; DC-13: 1 A / DC 24 V
Recommended minimum load	12 V / 10 mA
Pull-in time (typ.)	15 ms
Drop-out time (typ.)	8 ms
Bounce time (typ)	7 ms
Electrical life (N.O.; resistive load; 23 °C)	

Subject to changes. Please also observe the further product documentation!

WAGO Kontakttechnik GmbH & Co. KG
Hansastr. 27
32423 Minden
Phone: +49571 887-0 | Fax: +49571 887-169
Email: info.de@wago.com | Web: www.wago.com

Do you have any questions about our products?
We are always happy to take your call at +49 (571) 887-44222.

	10 x 10^3 switching operations
Mechanical life	5 x 10^6 switching operations
Max. switching load with load/without load	6 min^{-1} / 300 min^{-1}

Signaling

Status indication	Mechanical

Safety and protection:

Dielectric strength, control/load circuit (AC, 1 min)	5 kVrms
Dielectric strength open contact (AC, 1 min)	1 kVrms
Dielectric strength, load/load circuit (AC, 1 min)	2.5 kVrms
Protection class	IP20

Commercial data

Packaging type	BOX

Counterpart

Downloads

Documentation

Additional Information

Disposal; Electrical and electronic equipment, Packaging	V 1.0.0	pdf 265.8 kB	Download

Installation Notes

Subject to changes. Please also observe the further product documentation!

WAGO Kontakttechnik GmbH & Co. KG
Hansastr. 27
32423 Minden
Phone: +49571 887-0 | Fax: +49571 887-169
Email: info.de@wago.com | Web: www.wago.com

Do you have any questions about our products?
We are always happy to take your call at +49 (571) 887-44222.