Data sheet | Item number: 806-205

2-conductor PCB terminal block; 1.5 mm²; Pin spacing 5 mm; 5-pole; Push-in CAGE CLAMP®; 1,50 mm²; gray

www.wago.com/806-205

RoHS Compliant ✓ BOMcheck.net Color:

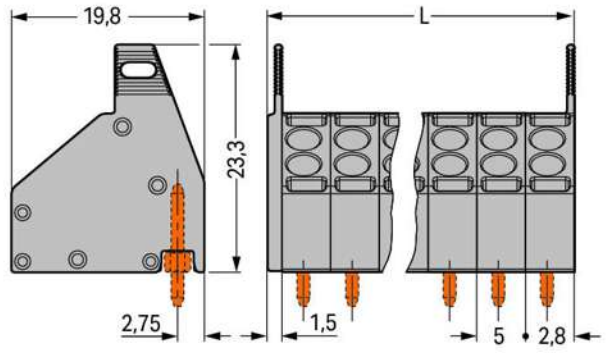

L = (pole no. x pin spacing) + 1.5 mm

Item description

- Compact, 2-conductor PCB connector strips (pinstrip pluggable) with Push-in CAGE CLAMP® connection and screwdriver-actuation
- Push-in termination of solid and ferruled conductors
- Double entries for power supply and potential distribution
- Quick and easy PCB replacement, without disrupting looped-through potentials

Data

Electrical data

Ratings per IEC/EN 60664-1

Ratings per	IEC/EN 60664-1

Subject to changes. Please also observe the further product documentation!

WAGO Kontakttechnik GmbH & Co. KG
Hansastr. 27
32423 Minden
Phone: +49571 887-0 | Fax: +49571 887-169
Email: info.de@wago.com | Web: www.wago.com

Do you have any questions about our products?
We are always happy to take your call at +49 (571) 887-44222.

Rated voltage (III / 3)	250 V
Rated impulse voltage (III / 3)	4 kV
Rated voltage (III / 2)	320 V
Rated impulse voltage (III / 2)	4 kV
Rated voltage (II / 2)	630 V
Rated impulse voltage (II / 2)	4 kV
Rated current	10 A
Legend (ratings)	(III / 2) ≙ Overvoltage category III / Pollution degree 2

Approvals per UL 1059

Rated voltage UL (Use Group B)	300 V
Rated current UL (Use Group B)	10 A
Rated voltage UL (Use Group D)	300 V
Rated current UL (Use Group D)	10 A
Approvals per	UL 1059

Approvals per CSA

Rated voltage CSA (Use Group B)	300 V
Rated current CSA (Use Group B)	10 A

Connection data

Connection technology	Push-in CAGE CLAMP®
Actuation type	Operating tool
Solid conductor	0.2 … 1.5 mm² / 24 … 16 AWG
Fine-stranded conductor	0.2 … 1.5 mm² / 24 … 16 AWG
Fine-stranded conductor with ferrule with plastic collar	0.25 … 1 mm²
Fine-stranded conductor with ferrule without plastic collar	0.25 … 1 mm²
Strip length	9 … 10 mm / 0.35 … 0.39 inch
Conductor entry angle to the PCB	45 °
No. of poles	5
Total number of connection points	10
Total number of potentials	5
Number of connection types	1
Number of levels	1

Subject to changes. Please also observe the further product documentation!

WAGO Kontakttechnik GmbH & Co. KG
Hansastr. 27
32423 Minden
Phone: +49571 887-0 | Fax: +49571 887-169
Email: info.de@wago.com | Web: www.wago.com

Do you have any questions about our products?
We are always happy to take your call at +49 (571) 887-44222.

Geometrical Data

Pin spacing	5 mm / 0.197 inch
Width	26.5 mm / 1.043 inch
Height	23.3 mm / 0.917 inch
Depth	19.8 mm / 0.78 inch
Solder pin diameter	1 mm

Plug connection

Contact type (pluggable connector)	Female connector/socket
Connector connection type	for PCBs
Mating direction to the PCB	90 °

PCB contact

PCB contact	THT

Material Data

Color	gray
Material group	I
Insulating material	Polyamide 66 (PA 66)
Flammability class per UL94	V0
Clamping spring material	Chrome nickel spring steel (CrNi)
Contact material	Copper alloy
Contact plating	tin-plated
Fire load	0.131 MJ
Weight	6.5 g

Environmental Requirements

Limit temperature range	-60 … +105 °C

Commercial data

Product Group	4 (Printed Circuit)
Packaging type	BOX
Country of origin	PL
GTIN	4045454077105
Customs Tariff No.	85369010000

Subject to changes. Please also observe the further product documentation!

WAGO Kontakttechnik GmbH & Co. KG
Hansastr. 27
32423 Minden
Phone: +49571 887-0 | Fax: +49571 887-169
Email: info.de@wago.com | Web: www.wago.com

Do you have any questions about our products?
We are always happy to take your call at +49 (571) 887-44222.

Approvals / Certificates

Country specific Approvals

Logo	Approval	Additional Approval Text	Certificate name
	CCA DEKRA Certification B.V.	EN 60947-7-4	NTR NL 7444
	CCA DEKRA Certification B.V.	EN 60947-7-4	2169331.27
	CSA DEKRA Certification B.V.	C22.2	1132097

UL-Approvals

Logo	Approval	Additional Approval Text	Certificate name
	UR Underwriters Laboratories Inc.	UL 1059	E45172, sec. 6

Counterpart

Compatible products

General accessories

	Item no.: 806-905 Board-to-Board Link; 5-pole	www.wago.com/806-905

tools

	Item no.: 210-657 Operating tool; Blade: 3.5 x 0.5 mm; with a partially insulated shaft; short	www.wago.com/210-657

Subject to changes. Please also observe the further product documentation!

WAGO Kontakttechnik GmbH & Co. KG
Hansastr. 27
32423 Minden
Phone: +49571 887-0 | Fax: +49571 887-169
Email: info.de@wago.com | Web: www.wago.com

Do you have any questions about our products?
We are always happy to take your call at +49 (571) 887-44222.

	Item no.: 210-720 Operating tool; Blade: 3.5 x 0.5 mm; with a partially insulated shaft	www.wago.com/210-720

ferrule

	Item no.: 216-101 Ferrule; Sleeve for 0.5 mm² / AWG 22; uninsulated; electro-tin plated	www.wago.com/216-101
	Item no.: 216-102 Ferrule; Sleeve for 0.75 mm² / AWG 20; uninsulated; electro-tin plated	www.wago.com/216-102
	Item no.: 216-103 Ferrule; Sleeve for 1 mm² / AWG 18; uninsulated; electro-tin plated	www.wago.com/216-103
	Item no.: 216-121 Ferrule; Sleeve for 0.5 mm² / AWG 22; uninsulated; electro-tin plated	www.wago.com/216-121
	Item no.: 216-122 Ferrule; Sleeve for 0.75 mm² / AWG 20; uninsulated; electro-tin plated	www.wago.com/216-122
	Item no.: 216-123 Ferrule; Sleeve for 1 mm² / AWG 18; uninsulated; electro-tin plated	www.wago.com/216-123
	Item no.: 216-131 Ferrule; Sleeve for 0.25 mm² / AWG 24; uninsulated; electro-tin plated	www.wago.com/216-131
	Item no.: 216-132 Ferrule; Sleeve for 0.34 mm² / AWG 24; uninsulated; electro-tin plated	www.wago.com/216-132
	Item no.: 216-141 Ferrule; Sleeve for 0.5 mm² / 20 AWG; uninsulated; electro-tin plated; electrolytic copper; gastight crimped; acc. to DIN 46228, Part 1/08.92	www.wago.com/216-141
	Item no.: 216-142 Ferrule; Sleeve for 0.75 mm² / 18 AWG; uninsulated; electro-tin plated; electrolytic copper; gastight crimped; acc. to DIN 46228, Part 1/08.92	www.wago.com/216-142
	Item no.: 216-143 Ferrule; Sleeve for 1 mm² / AWG 18; uninsulated; electro-tin plated; electrolytic copper; gastight crimped; acc. to DIN 46228, Part 1/08.92	www.wago.com/216-143
	Item no.: 216-151 Ferrule; Sleeve for 0.25 mm² / AWG 24; uninsulated; electro-tin plated	www.wago.com/216-151
	Item no.: 216-152 Ferrule; Sleeve for 0.34 mm² / AWG 24; uninsulated; electro-tin plated	www.wago.com/216-152
	Item no.: 216-201 Ferrule; Sleeve for 0.5 mm² / 20 AWG; insulated; electro-tin plated; white	www.wago.com/216-201
	Item no.: 216-202 Ferrule; Sleeve for 0.75 mm² / 18 AWG; insulated; electro-tin plated; gray	www.wago.com/216-202
	Item no.: 216-203 Ferrule; Sleeve for 1 mm² / AWG 18; insulated; electro-tin plated; red	www.wago.com/216-203

Subject to changes. Please also observe the further product documentation!

WAGO Kontakttechnik GmbH & Co. KG
Hansastr. 27
32423 Minden
Phone: +49571 887-0 | Fax: +49571 887-169
Email: info.de@wago.com | Web: www.wago.com

Do you have any questions about our products?
We are always happy to take your call at +49 (571) 887-44222.

	Item no.: 216-221 Ferrule; Sleeve for 0.5 mm² / 20 AWG; insulated; electro-tin plated; white	www.wago.com/216-221
	Item no.: 216-222 Ferrule; Sleeve for 0.75 mm² / 18 AWG; insulated; electro-tin plated; gray	www.wago.com/216-222
	Item no.: 216-223 Ferrule; Sleeve for 1 mm² / AWG 18; insulated; electro-tin plated; red	www.wago.com/216-223
	Item no.: 216-241 Ferrule; Sleeve for 0.5 mm² / 20 AWG; insulated; electro-tin plated; electrolytic copper; gastight crimped; acc. to DIN 46228, Part 4/09.90; white	www.wago.com/216-241
	Item no.: 216-242 Ferrule; Sleeve for 0.75 mm² / 18 AWG; insulated; electro-tin plated; electrolytic copper; gastight crimped; acc. to DIN 46228, Part 4/09.90; gray	www.wago.com/216-242
	Item no.: 216-243 Ferrule; Sleeve for 1 mm² / AWG 18; insulated; electro-tin plated; electrolytic copper; gastight crimped; acc. to DIN 46228, Part 4/09.90; red	www.wago.com/216-243
	Item no.: 216-262 Ferrule; Sleeve for 0.75 mm² / 18 AWG; insulated; electro-tin plated; electrolytic copper; gastight crimped; acc. to DIN 46228, Part 4/09.90; gray	www.wago.com/216-262
	Item no.: 216-263 Ferrule; Sleeve for 1 mm² / AWG 18; insulated; electro-tin plated; electrolytic copper; gastight crimped; acc. to DIN 46228, Part 4/09.90; red	www.wago.com/216-263
	Item no.: 216-264 Ferrule; Sleeve for 1.5 mm² / AWG 16; insulated; electro-tin plated; electrolytic copper; gastight crimped; acc. to DIN 46228, Part 4/09.90; black	www.wago.com/216-264
	Item no.: 216-284 Ferrule; Sleeve for 1.5 mm² / AWG 16; insulated; electro-tin plated; electrolytic copper; gastight crimped; acc. to DIN 46228, Part 4/09.90; black	www.wago.com/216-284
	Item no.: 216-301 Ferrule; Sleeve for 0.25 mm² / AWG 24; insulated; electro-tin plated; yellow	www.wago.com/216-301
	Item no.: 216-302 Ferrule; Sleeve for 0.34 mm² / 22 AWG; insulated; electro-tin plated; green	www.wago.com/216-302
	Item no.: 216-321 Ferrule; Sleeve for 0.25 mm² / AWG 24; insulated; electro-tin plated; yellow	www.wago.com/216-321
	Item no.: 216-322 Ferrule; Sleeve for 0.34 mm² / 22 AWG; insulated; electro-tin plated; green	www.wago.com/216-322
Marking accessories		
	Item no.: 210-332/500-202 Marking strips; as a DIN A4 sheet; MARKED; 1-16 (160x); Height of marker strip: 3 mm; Strip length 182 mm; Horizontal marking; Self-adhesive; white	www.wago.com/210-332/500-202
	Item no.: 210-332/500-204 Marking strips; as a DIN A4 sheet; MARKED; 17-32 (160x); Height of marker strip: 3 mm; Strip length 182 mm; Horizontal marking; Self-adhesive; white	www.wago.com/210-332/500-204

Subject to changes. Please also observe the further product documentation!

WAGO Kontakttechnik GmbH & Co. KG
Hansastr. 27
32423 Minden
Phone: +49571 887-0 | Fax: +49571 887-169
Email: info.de@wago.com | Web: www.wago.com

Do you have any questions about our products?
We are always happy to take your call at +49 (571) 887-44222.

	Item no.: 210-332/500-205 Marking strips; as a DIN A4 sheet; MARKED; 1-32 (80x); Height of marker strip: 3 mm; Strip length 182 mm; Horizontal marking; Self-adhesive; white	www.wago.com/210-332/500-205
	Item no.: 210-332/500-206 Marking strips; as a DIN A4 sheet; MARKED; 33-48 (160x); Height of marker strip: 3 mm; Strip length 182 mm; Horizontal marking; Self-adhesive; white	www.wago.com/210-332/500-206

Downloads

Documentation

Additional Information

Technical explanations	Apr 3, 2019	pdf 3.6 MB	Download

CAD/CAE-Data

CAD data

2D/3D Models 806-205	URL	Download

CAE data

EPLAN Data Portal 806-205	URL	Download

PCB Design

Symbol and Footprint 806-205	URL	Download

CAx data for your PCB design, consisting of "schematic symbols and PCB footprints", allow easy integration of the WAGO component into your development environment.

Supported formats:

- Accel EDA 14 & 15
- Altium 6 to current version
- Cadence Allegro
- DesignSpark
- Eagle Libraries
- KiCad
- Mentor Graphics BoardStation
- Mentor Graphics Design Architect
- Mentor Graphics Design Expedition 99 and 2000
- OrCAD 9.X PCB and Capture

Subject to changes. Please also observe the further product documentation!

WAGO Kontakttechnik GmbH & Co. KG
Hansastr. 27
32423 Minden
Phone: +49571 887-0 | Fax: +49571 887-169
Email: info.de@wago.com | Web: www.wago.com

Do you have any questions about our products?
We are always happy to take your call at +49 (571) 887-44222.

- PADS PowerPCB 3, 3.5, 4.X, and 5.X
- PADS PowerPCB and PowerLogic 3.0
- PCAD 2000, 2001, 2002, 2004, and 2006
- Pulsonix 8.5 or newer
- STL
- 3D STEP
- TARGET 3001!
- View Logic ViewDraw
- Quadcept
- Zuken CadStar 3 and 4
- Zuken CR-5000 and CR-8000

PCB Component Libraries (EDA), PCB CAD Library Ultra Librarian

Installation Notes

Inserting a conductor

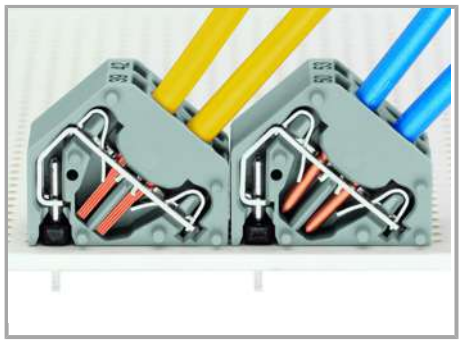

Inserting solid conductors via push-in termination.

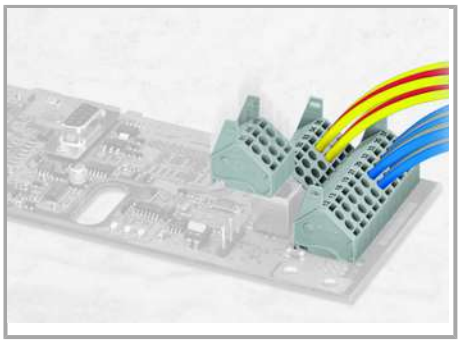

Conductor termination directly on the PCB or wiring prior to mounting on PCB

Inserting/removing fine-stranded conductors: Open the clamping unit using a screwdriver and insert a stripped conductor until it hits backstop.

WAGO Kontakttechnik GmbH & Co. KG
Hansastr. 27
32423 Minden
Phone: +49571 887-0 | Fax: +49571 887-169
Email: info.de@wago.com | Web: www.wago.com

Do you have any questions about our products?
We are always happy to take your call at +49 (571) 887-44222.