Data sheet | Item number: 852-201/040-002

SFP module 2: 1310nm; 100Base-FX Multi-Mode LC; 2 km; EXT

www.wago.com/852-201_040-002

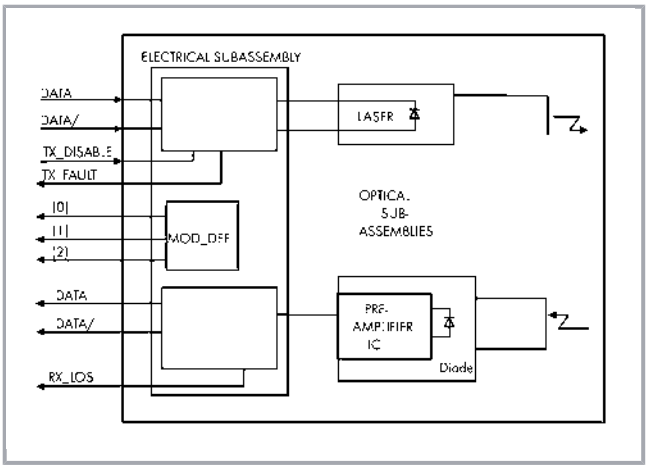

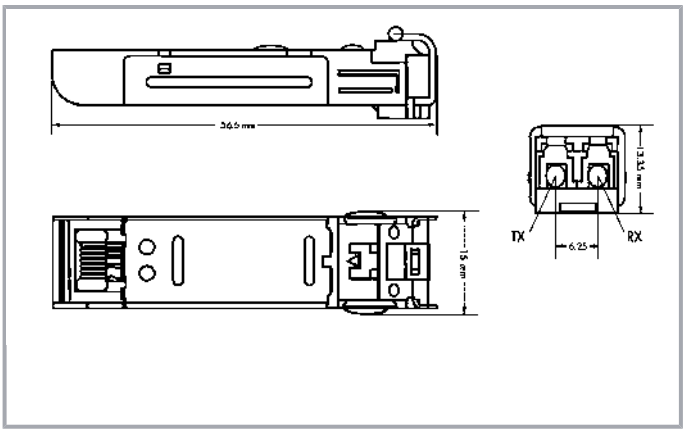

Item description

Features:

- Duplex LC optical connector

Subject to changes. Please also observe the further product documentation!

WAGO Kontakttechnik GmbH & Co. KG
Hansastr. 27
32423 Minden
Phone: +49571 887-0 | Fax: +49571 887-169
Email: info.de@wago.com | Web: www.wago.com

Do you have any questions about our products?
We are always happy to take your call at +49 (571) 887-44222.

- Small Form-Factor Pluggable (SFP) industry-standard design
- Compliant with Fast ETHERNET standard
- Differential LVPECL inputs and outputs
- Power supply: 3.3 V
- TTL signal detect indicator
- Hot-pluggable capability

Data

Technical Data

LWL-Fasertyp	Multi-Mode

Connection data

Connection technology: communication/fieldbus	1 x SFP, LC fiber-optic connectors
Anschlussanforderung zulässige Leitungslänge	2,000 m
Connection requirement (permissible cable type)	Faser Multi-Mode 62,5/125 µm, 50/125 µm, Wellenlänge 1310 nm

Geometrical Data

Width	13.4 mm / 0.528 inch
Height	13.3 mm / 0.524 inch
Depth	56.6 mm / 2.228 inch

Mechanical data

Weight	25 g

Environmental Requirements

Surrounding air (operating) temperature	-40 … 70 °C
Surrounding air (storage) temperature	-40 … 80 °C

Commercial data

Packaging type	BOX
Country of origin	TW
GTIN	4050821157649
Customs Tariff No.	85176200000

Counterpart

Subject to changes. Please also observe the further product documentation!

WAGO Kontakttechnik GmbH & Co. KG
Hansastr. 27
32423 Minden
Phone: +49571 887-0 | Fax: +49571 887-169
Email: info.de@wago.com | Web: www.wago.com

Do you have any questions about our products?
We are always happy to take your call at +49 (571) 887-44222.

Downloads

Documentation

System Description

Industrial Switches – General Product Information		pdf 2.0 MB	Download

Additional Information

Disposal; Electrical and electronic equipment, Packaging	V 1.0.0	pdf 265.8 kB	Download

CAD/CAE-Data

CAE data

EPLAN Data Portal 852-201/040-002	URL	Download
WSCAD Universe 852-201/040-002	URL	Download

Installation Notes

WAGO Kontakttechnik GmbH & Co. KG
Hansastr. 27
32423 Minden
Phone: +49571 887-0 | Fax: +49571 887-169
Email: info.de@wago.com | Web: www.wago.com

Do you have any questions about our products?
We are always happy to take your call at +49 (571) 887-44222.