Power tap; without fuse; 10 mm² (8 AWG) - 16 mm² (6 AWG); N-conductor

www.wago.com/855-8004

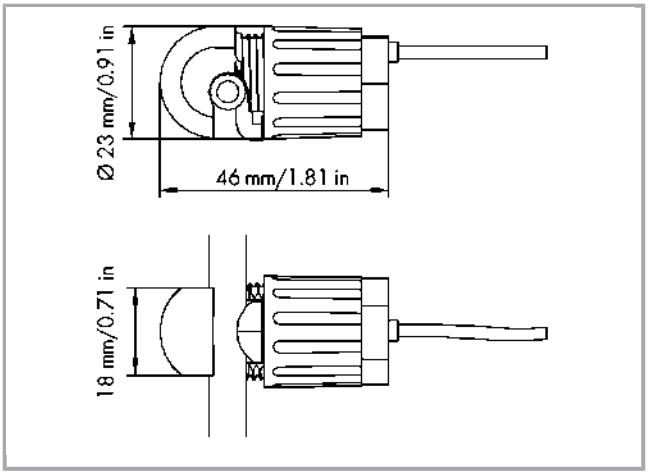

Item description

Short description:

These voltage taps (855 Series) easily and safely tap the measurement voltage.

This allows a fuse-protected measurement voltage to be tapped from an insulated conductor with just one turn – no tools required.
Features:

- Safely tap the measurement voltage with just one turn
- Tool-free assembly
- Secure mounting

Subject to changes. Please also observe the further product documentation!

WAGO Kontakttechnik GmbH & Co. KG
Hansastr. 27
32423 Minden
Phone: +49571 887-0 | Fax: +49571 887-169
Email: info.de@wago.com | Web: www.wago.com

Do you have any questions about our products?
We are always happy to take your call at +49 (571) 887-44222.

- Voltage taps (855-8001 and 855-8003) include a (5 x 25) mm 2 A fuse
- For insulated conductors up to 16 mm² (6 AWG)
- Cable length: 3 m

Data
Technical Data

Output – Voltage tap

Rated voltage	AC 400 V
Max. continuous current	2 A
Max. voltage drop at output	≤ AC 0,5 V
Fuse (voltage path)	-

Safety and protection:

Test voltage	AC 3 kV; 50 Hz; 1 min
Rated surge voltage	6 kV
Overvoltage category	III
Pollution degree	2
Protection class	IP20

Connection data

Connection technology	IDC
Solid conductor	10 … 16 mm² / 8 … 6 AWG
Fine-stranded conductor	10 … 16 mm² / 8 … 6 AWG
Feedthrough for measurement conductor	Ø 5 … 7 mm
Type of cable	Secondary side: 1 x 1.0 mm²; flexible; with ferrule

Geometrical Data

Width	23 mm / 0.906 inch
Height	50 mm / 1.969 inch
Depth	23 mm / 0.906 inch
Cable length	3 m

Mechanical data

Mounting type	Insulation displacement connection (IDC)
Type of mounting	Mounting on insulated round cable

Subject to changes. Please also observe the further product documentation!

WAGO Kontakttechnik GmbH & Co. KG
Hansastr. 27
32423 Minden
Phone: +49571 887-0 | Fax: +49571 887-169
Email: info.de@wago.com | Web: www.wago.com

Do you have any questions about our products?
We are always happy to take your call at +49 (571) 887-44222.

Usability	Can be reused several times (max. 24 times)

Material Data

Flammability class per UL94	V2
Housing material	PA 66
Weight	21 g

Environmental Requirements

Pollution degree	2
Surrounding air (operating) temperature	-5 … 55 °C
Surrounding air (storage) temperature	-20 … 70 °C
Relative humidity	5 … 85 % (without condensation)
Max. operating altitude	2000 m

Standards and specifications

Conformity marking	CE
Standards/specifications	EN 60947-7-1

Commercial data

Packaging type	BOX
Country of origin	NL
GTIN	4055143378840
Customs Tariff No.	85366990990

Counterpart

Compatible products

General accessories

	Item no.: 2007-8873 Compact terminal block; for current and voltage transformers; 6,00 mm²; multicoloured	www.wago.com/2007-8873
	Item no.: 2007-8874 Compact terminal block; for current and voltage transformers; 6,00 mm²; multicoloured	www.wago.com/2007-8874
	Item no.: 2007-8875 Compact terminal block; for current transformer circuit; 6,00 mm²; multicoloured	www.wago.com/2007-8875
	Item no.: 2007-8876	

Subject to changes. Please also observe the further product documentation!

WAGO Kontakttechnik GmbH & Co. KG
Hansastr. 27
32423 Minden
Phone: +49571 887-0 | Fax: +49571 887-169
Email: info.de@wago.com | Web: www.wago.com

Do you have any questions about our products?
We are always happy to take your call at +49 (571) 887-44222.

	Compact terminal block; for 3-phase current transformer circuit; 6,00 mm²; multicoloured	www.wago.com/2007-8876
	Item no.: 2007-8877 Compact terminal block; for current transformer circuit; 6,00 mm²; multicoloured	www.wago.com/2007-8877
	Item no.: 2857-570/024-000 3-Phase Power Measurement Module; 3x400/690 V/RC; Modbus RTU; Digital output; Configuration via software; Supply voltage: 24 VDC	www.wago.com/2857-570/024-000
	Item no.: 2857-570/024-001 3-Phase Power Measurement Module; 3x400/690 V/1 A; Modbus RTU; Digital output; Configuration via software; Supply voltage: 24 VDC	www.wago.com/2857-570/024-001
	Item no.: 2857-570/024-005 3-Phase Power Measurement Module; 3x400/690 V/5 A; Modbus RTU; Digital output; Configuration via software; Supply voltage: 24 VDC	www.wago.com/2857-570/024-005
	Item no.: 857-560 Voltage signal conditioner; Voltage input signal; Current and voltage output signal; Digital output; Configuration via software; Supply voltage: 24 VDC; 6 mm module width	www.wago.com/857-560
	Item no.: 857-569 Power signal conditioner; Current and voltage input signal; Current and voltage output signal; Digital output; Configuration via software; Supply voltage: 24 VDC; 6 mm module width	www.wago.com/857-569

Downloads

Documentation

Bid Text

855-8004 GAEB docx - Datei	Feb 20, 2019	docx 17.6 kB	Download
855-8004 GAEB X81 - Datei	Feb 19, 2019	xml 5.1 kB	Download

Instruction Leaflet

Potentialabgriffe		pdf 79.6 kB	Download

Additional Information

Disposal; Electrical and electronic equipment, Packaging	V 1.0.0	pdf 265.8 kB	Download

Installation Notes

Subject to changes. Please also observe the further product documentation!

WAGO Kontakttechnik GmbH & Co. KG
Hansastr. 27
32423 Minden
Phone: +49571 887-0 | Fax: +49571 887-169
Email: info.de@wago.com | Web: www.wago.com

Do you have any questions about our products?
We are always happy to take your call at +49 (571) 887-44222.

Installation

Installation on insulated conductor with IDC connection

Subject to changes. Please also observe the further product documentation!

WAGO Kontakttechnik GmbH & Co. KG
Hansastr. 27
32423 Minden
Phone: +49571 887-0 | Fax: +49571 887-169
Email: info.de@wago.com | Web: www.wago.com

Do you have any questions about our products?
We are always happy to take your call at +49 (571) 887-44222.