Data sheet | Item number: 858-517

Relay module; Nominal input voltage: 115 VAC; 4 changeover contacts; Limiting continuous current: 5 A; with gold contacts; with manual operation; Red status indicator; Module width: 31 mm

www.wago.com/858-517

RoHS ✓ Compliant

BOMcheck.net

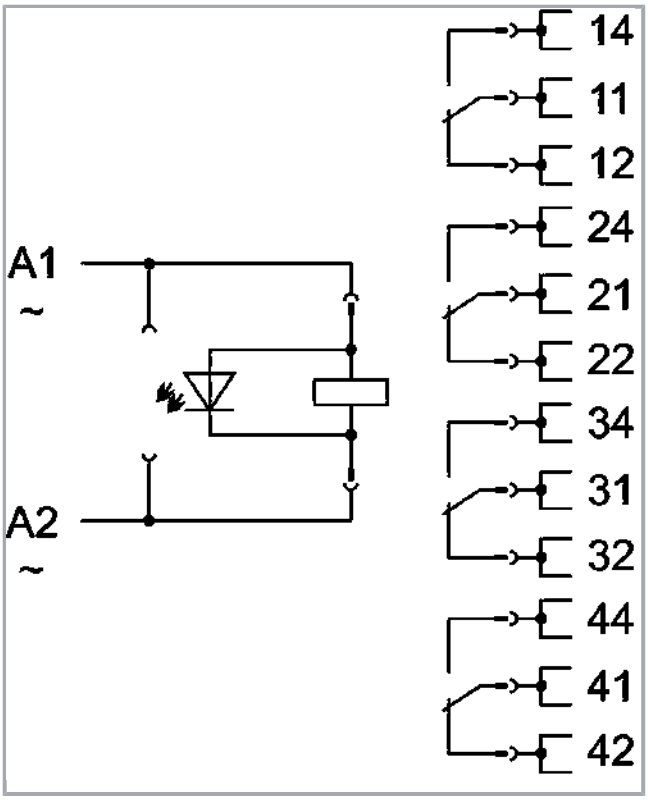

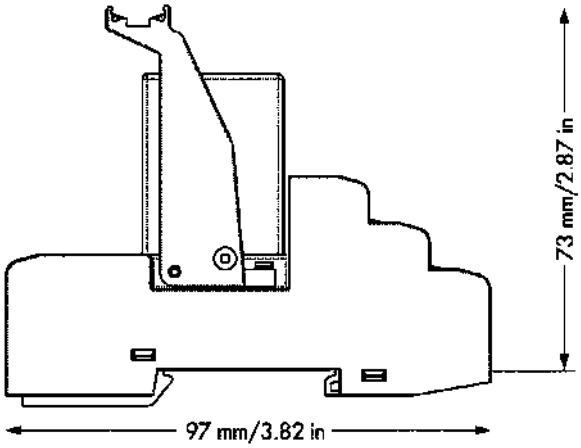

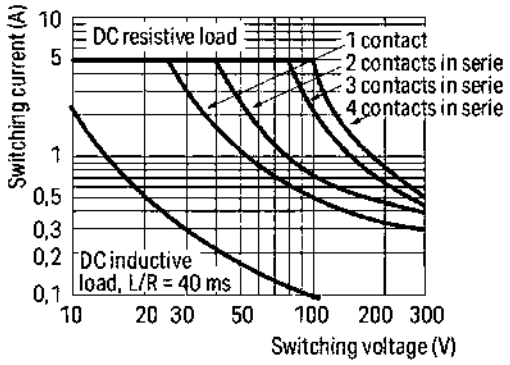

DC load limit curve

Subject to changes. Please also observe the further product documentation!

WAGO Kontakttechnik GmbH & Co. KG
Hansastr. 27
32423 Minden
Phone: +49571 887-0 | Fax: +49571 887-169
Email: info.de@wago.com | Web: www.wago.com

Do you have any questions about our products?
We are always happy to take your call at +49 (571) 887-44222.

Item description

Note:

To prevent damaging the gold layer, 30 VDC switching voltages and 50 mA currents must not be exceeded. Higher switching power eventually evaporates the gold layer. The resulting deposits in the housing may reduce service life.

Data
Technical Data

Control circuit

Nominal input voltage U_N	AC 115 V
Input voltage range	-20 … +10 %
Nominal input current at U_N	10 mA

Load circuit:

Number of changeover/switchover contacts	4
Contact material (relay)	AgCe + Au
Limiting continuous current	5 A
Max. make current (resistive)	(AC) 15 A / 4 s
Max. switching voltage	AC 250 V
Max. switching power (resistive)	AC 1250 VA; DC see load limit curve
Recommended minimum load	5 V / 1 mA / 50 mW
Pull-in time (typ.)	25 ms
Drop-out time (typ.)	35 ms
Bounce time (typ)	4 ms
Electrical life (N.O.; resistive load; 23 °C)	100 x 10^3 switching operations
Mechanical life	20 x 10^6 switching operations

Signaling

Status indication	LED red Mechanical

Safety and protection:

Rated voltage	250 V
Rated impulse voltage	2.5 kV

Subject to changes. Please also observe the further product documentation!

WAGO Kontakttechnik GmbH & Co. KG
Hansastr. 27
32423 Minden
Phone: +49571 887-0 | Fax: +49571 887-169
Email: info.de@wago.com | Web: www.wago.com

Do you have any questions about our products?
We are always happy to take your call at +49 (571) 887-44222.

Pollution degree	2
Dielectric strength, control/load circuit (AC, 1 min)	1.5 kVrms
Dielectric strength open contact (AC, 1 min)	1 kVrms
Dielectric strength, load/load circuit (AC, 1 min)	1.5 kVrms
Protection class	IP20

Connection data

Connection technology	Push-in CAGE CLAMP®
Solid conductor	0.34 … 1.5 mm² / 22 … 16 AWG
Fine-stranded conductor	0.34 … 1.5 mm² / 22 … 16 AWG
Strip length	9 … 10 mm / 0.35 … 0.39 inch
Note (conductor cross-section)	2 x 0.34 … 2 x 1.5 mm² / 1 x 2.5 mm² / 2 x 22 … 2 x 16 AWG

Geometrical Data

Width	31 mm / 1.22 inch
Height from upper-edge of DIN-35 rail	73 mm / 2.874 inch
Depth	97 mm / 3.819 inch

Mechanical data

Type of mounting	DIN-35 rail

Material Data

Fire load	1.225 MJ
Weight	95.3 g

Environmental Requirements

Surrounding air (operating) temperature at U_N	-25 … 70 °C
Surrounding air (operating) temperature for UL at U_N	-25 … 50 °C
Surrounding air (storage) temperature	-40 … 80 °C
Processing temperature	-25 … +50 °C

Standards and specifications

Standards/specifications	EN 61010-2-201; EN 61810-1; EN 61373; UL 508 (max. 50 °C)

Subject to changes. Please also observe the further product documentation!

WAGO Kontakttechnik GmbH & Co. KG
Hansastr. 27
32423 Minden
Phone: +49571 887-0 | Fax: +49571 887-169
Email: info.de@wago.com | Web: www.wago.com

Do you have any questions about our products?
We are always happy to take your call at +49 (571) 887-44222.

Commercial data

Product Group	6 (Interface Electronics)
Packaging type	BOX
Country of origin	DE
GTIN	4055143567855
Customs Tariff No.	85364900990

Approvals / Certificates

UL-Approvals

Logo	Approval	Additional Approval Text	Certificate name
	UL UL International Netherlands B.V. (ORDINARY LOCATIONS)	UL 508	E175199 Sec.6

Counterpart

Compatible products

ferrule

	Item no.: 216-241 Ferrule; Sleeve for 0.5 mm² / 20 AWG; insulated; electro-tin plated; electrolytic copper; gastight crimped; acc. to DIN 46228, Part 4/09.90; white	www.wago.com/216-241
	Item no.: 216-242 Ferrule; Sleeve for 0.75 mm² / 18 AWG; insulated; electro-tin plated; electrolytic copper; gastight crimped; acc. to DIN 46228, Part 4/09.90; gray	www.wago.com/216-242
	Item no.: 216-243 Ferrule; Sleeve for 1 mm² / AWG 18; insulated; electro-tin plated; electrolytic copper; gastight crimped; acc. to DIN 46228, Part 4/09.90; red	www.wago.com/216-243
	Item no.: 216-244 Ferrule; Sleeve for 1.5 mm² / AWG 16; insulated; electro-tin plated; electrolytic copper; gastight crimped; acc. to DIN 46228, Part 4/09.90; black	www.wago.com/216-244

Jumper

Subject to changes. Please also observe the further product documentation!

WAGO Kontakttechnik GmbH & Co. KG
Hansastr. 27
32423 Minden
Phone: +49571 887-0 | Fax: +49571 887-169
Email: info.de@wago.com | Web: www.wago.com

Do you have any questions about our products?
We are always happy to take your call at +49 (571) 887-44222.

	Item no.: 858-402 Push-in type jumper bar; for the coil side	www.wago.com/858-402

General accessories

	Item no.: 209-145 Group marker carrier; white	www.wago.com/209-145
	Item no.: 209-184 Protection cover; transparent	www.wago.com/209-184
	Item no.: 788-124 Accessories for relay modules; Operation status indicator: red	www.wago.com/788-124
	Item no.: 788-148 Filter module; RC filter element; Nominal voltage: 230 VAC	www.wago.com/788-148

Marking accessories

	Item no.: 2009-110 Marking strips; on reel; not stretchable; plain; snap-on type; white	www.wago.com/2009-110
	Item no.: 2009-115 WMB-Inline; for Smart Printer; 1500 pieces on roll; stretchable 5 - 5.2 mm; plain; snap-on type; white	www.wago.com/2009-115
	Item no.: 2009-115/000-002 WMB-Inline; for Smart Printer; 1500 pieces on roll; stretchable 5 - 5.2 mm; plain; snap-on type; yellow	www.wago.com/2009-115/000-002
	Item no.: 2009-115/000-006 WMB-Inline; for Smart Printer; 1500 pieces on roll; stretchable 5 - 5.2 mm; plain; snap-on type; blue	www.wago.com/2009-115/000-006
	Item no.: 2009-115/000-007 WMB-Inline; for Smart Printer; 1500 pieces on roll; stretchable 5 - 5.2 mm; plain; snap-on type; gray	www.wago.com/2009-115/000-007
	Item no.: 2009-115/000-012 WMB-Inline; for Smart Printer; 1500 pieces on roll; stretchable 5 - 5.2 mm; plain; snap-on type; orange	www.wago.com/2009-115/000-012
	Item no.: 2009-115/000-017 WMB-Inline; for Smart Printer; 1500 pieces on roll; stretchable 5 - 5.2 mm; plain; snap-on type; light green	www.wago.com/2009-115/000-017
	Item no.: 2009-115/000-023 WMB-Inline; for Smart Printer; 1500 pieces on roll; stretchable 5 - 5.2 mm; plain; snap-on type; green	www.wago.com/2009-115/000-023
	Item no.: 2009-115/000-024 WMB-Inline; for Smart Printer; 1500 pieces on roll; stretchable 5 - 5.2 mm; plain; snap-on type; violet	www.wago.com/2009-115/000-024
	Item no.: 209-128 Adaptor; gray	www.wago.com/209-128

Subject to changes. Please also observe the further product documentation!

WAGO Kontakttechnik GmbH & Co. KG
Hansastr. 27
32423 Minden
Phone: +49571 887-0 | Fax: +49571 887-169
Email: info.de@wago.com | Web: www.wago.com

Do you have any questions about our products?
We are always happy to take your call at +49 (571) 887-44222.

	Item no.: 209-183 Marker card; white	www.wago.com/209-183
	Item no.: 210-110 Fiber-tip pen	www.wago.com/210-110
	Item no.: 249-105 Group marker carrier; gray	www.wago.com/249-105
	Item no.: 793-501 WMB marking card; as card; not stretchable; plain; snap-on type; white	www.wago.com/793-501
	Item no.: 793-501/000-002 WMB marking card; as card; not stretchable; plain; snap-on type; yellow	www.wago.com/793-501/000-002
	Item no.: 793-501/000-005 WMB marking card; as card; not stretchable; plain; snap-on type; red	www.wago.com/793-501/000-005
	Item no.: 793-501/000-006 WMB marking card; as card; not stretchable; plain; snap-on type; blue	www.wago.com/793-501/000-006
	Item no.: 793-501/000-007 WMB marking card; as card; not stretchable; plain; snap-on type; gray	www.wago.com/793-501/000-007
	Item no.: 793-501/000-012 WMB marking card; as card; not stretchable; plain; snap-on type; orange	www.wago.com/793-501/000-012
	Item no.: 793-501/000-017 WMB marking card; as card; not stretchable; plain; snap-on type; light green	www.wago.com/793-501/000-017
	Item no.: 793-501/000-023 WMB marking card; as card; not stretchable; plain; snap-on type; green	www.wago.com/793-501/000-023
	Item no.: 793-501/000-024 WMB marking card; as card; not stretchable; plain; snap-on type; violet	www.wago.com/793-501/000-024
	Item no.: 793-502 WMB marking card; as card; MARKED; 1 ... 10 (10x); not stretchable; Horizontal marking; snap-on type; white	www.wago.com/793-502
	Item no.: 793-502/000-002 WMB marking card; as card; MARKED; 1 ... 10 (10x); not stretchable; Horizontal marking; snap-on type; yellow	www.wago.com/793-502/000-002

Item no.: 793-502/000-005

Subject to changes. Please also observe the further product documentation!

WAGO Kontakttechnik GmbH & Co. KG
Hansastr. 27
32423 Minden
Phone: +49571 887-0 | Fax: +49571 887-169
Email: info.de@wago.com | Web: www.wago.com

Do you have any questions about our products?
We are always happy to take your call at +49 (571) 887-44222.

	WMB marking card; as card; MARKED; 1 ... 10 (10x); not stretchable; Horizontal marking; snap-on type; red	www.wago.com/793-502/000-005
	Item no.: 793-502/000-006 WMB marking card; as card; MARKED; 1 ... 10 (10x); not stretchable; Horizontal marking; snap-on type; blue	www.wago.com/793-502/000-006
	Item no.: 793-502/000-007 WMB marking card; as card; MARKED; 1 ... 10 (10x); not stretchable; Horizontal marking; snap-on type; gray	www.wago.com/793-502/000-007
	Item no.: 793-502/000-012 WMB marking card; as card; MARKED; 1 ... 10 (10x); not stretchable; Horizontal marking; snap-on type; orange	www.wago.com/793-502/000-012
	Item no.: 793-502/000-017 WMB marking card; as card; MARKED; 1 ... 10 (10x); not stretchable; Horizontal marking; snap-on type; light green	www.wago.com/793-502/000-017
	Item no.: 793-502/000-023 WMB marking card; as card; MARKED; 1 ... 10 (10x); not stretchable; Horizontal marking; snap-on type; green	www.wago.com/793-502/000-023
	Item no.: 793-502/000-024 WMB marking card; as card; MARKED; 1 ... 10 (10x); not stretchable; Horizontal marking; snap-on type; violet	www.wago.com/793-502/000-024
	Item no.: 793-503 WMB marking card; as card; MARKED; 11 ... 20 (10x); not stretchable; Horizontal marking; snap-on type; white	www.wago.com/793-503
	Item no.: 793-503/000-002 WMB marking card; as card; MARKED; 11 ... 20 (10x); not stretchable; Horizontal marking; snap-on type; yellow	www.wago.com/793-503/000-002
	Item no.: 793-503/000-005 WMB marking card; as card; MARKED; 11 ... 20 (10x); not stretchable; Horizontal marking; snap-on type; red	www.wago.com/793-503/000-005
	Item no.: 793-503/000-006 WMB marking card; as card; MARKED; 11 ... 20 (10x); not stretchable; Horizontal marking; snap-on type; blue	www.wago.com/793-503/000-006
	Item no.: 793-503/000-007 WMB marking card; as card; MARKED; 11 ... 20 (10x); not stretchable; Horizontal marking; snap-on type; gray	www.wago.com/793-503/000-007
	Item no.: 793-503/000-012 WMB marking card; as card; MARKED; 11 ... 20 (10x); not stretchable; Horizontal marking; snap-on type; orange	www.wago.com/793-503/000-012

Item no.: 793-503/000-017

Subject to changes. Please also observe the further product documentation!

WAGO Kontakttechnik GmbH & Co. KG
Hansastr. 27
32423 Minden
Phone: +49571 887-0 | Fax: +49571 887-169
Email: info.de@wago.com | Web: www.wago.com

Do you have any questions about our products?
We are always happy to take your call at +49 (571) 887-44222.

	WMB marking card; as card; MARKED; 11 ... 20 (10x); not stretchable; Horizontal marking; snap-on type; light green	www.wago.com/793-503/000-017
	Item no.: 793-503/000-023 WMB marking card; as card; MARKED; 11 ... 20 (10x); not stretchable; Horizontal marking; snap-on type; green	www.wago.com/793-503/000-023
	Item no.: 793-503/000-024 WMB marking card; as card; MARKED; 11 ... 20 (10x); not stretchable; Horizontal marking; snap-on type; violet	www.wago.com/793-503/000-024
	Item no.: 793-504 WMB marking card; as card; MARKED; 21 ... 30 (10x); not stretchable; Horizontal marking; snap-on type; white	www.wago.com/793-504
	Item no.: 793-504/000-002 WMB marking card; as card; MARKED; 21 ... 30 (10x); not stretchable; Horizontal marking; snap-on type; yellow	www.wago.com/793-504/000-002
	Item no.: 793-504/000-005 WMB marking card; as card; MARKED; 21 ... 30 (10x); not stretchable; Horizontal marking; snap-on type; red	www.wago.com/793-504/000-005
	Item no.: 793-504/000-006 WMB marking card; as card; MARKED; 21 ... 30 (10x); not stretchable; Horizontal marking; snap-on type; blue	www.wago.com/793-504/000-006
	Item no.: 793-504/000-012 WMB marking card; as card; MARKED; 21 ... 30 (10x); not stretchable; Horizontal marking; snap-on type; orange	www.wago.com/793-504/000-012
	Item no.: 793-504/000-017 WMB marking card; as card; MARKED; 21 ... 30 (10x); not stretchable; Horizontal marking; snap-on type; light green	www.wago.com/793-504/000-017
	Item no.: 793-504/000-023 WMB marking card; as card; MARKED; 21 ... 30 (10x); not stretchable; Horizontal marking; snap-on type; green	www.wago.com/793-504/000-023
	Item no.: 793-505 WMB marking card; as card; MARKED; 31 ... 40 (10x); not stretchable; Horizontal marking; snap-on type; white	www.wago.com/793-505
	Item no.: 793-505/000-005 WMB marking card; as card; MARKED; 31 ... 40 (10x); not stretchable; Horizontal marking; snap-on type; red	www.wago.com/793-505/000-005
	Item no.: 793-505/000-006 WMB marking card; as card; MARKED; 31 ... 40 (10x); not stretchable; Horizontal marking; snap-on type; blue	www.wago.com/793-505/000-006
	Item no.: 793-505/000-007 WMB marking card; as card; MARKED; 31 ... 40 (10x); not stretchable; Horizontal marking; snap-on type;	

Subject to changes. Please also observe the further product documentation!

WAGO Kontakttechnik GmbH & Co. KG
Hansastr. 27
32423 Minden
Phone: +49571 887-0 | Fax: +49571 887-169
Email: info.de@wago.com | Web: www.wago.com

Do you have any questions about our products?
We are always happy to take your call at +49 (571) 887-44222.

	gray	www.wago.com/793-505/000-007
	Item no.: 793-505/000-012 WMB marking card; as card; MARKED; 31 ... 40 (10x); not stretchable; Horizontal marking; snap-on type; orange	www.wago.com/793-505/000-012
	Item no.: 793-506 WMB marking card; as card; MARKED; 41 ... 50 (10x); not stretchable; Horizontal marking; snap-on type; white	www.wago.com/793-506
	Item no.: 793-506/000-005 WMB marking card; as card; MARKED; 41 ... 50 (10x); not stretchable; Horizontal marking; snap-on type; red	www.wago.com/793-506/000-005
	Item no.: 793-506/000-006 WMB marking card; as card; MARKED; 41 ... 50 (10x); not stretchable; Horizontal marking; snap-on type; blue	www.wago.com/793-506/000-006
	Item no.: 793-506/000-012 WMB marking card; as card; MARKED; 41 ... 50 (10x); not stretchable; Horizontal marking; snap-on type; orange	www.wago.com/793-506/000-012
	Item no.: 793-506/000-017 WMB marking card; as card; MARKED; 41 ... 50 (10x); not stretchable; Horizontal marking; snap-on type; light green	www.wago.com/793-506/000-017
	Item no.: 793-5501 WMB marking card; as card; for terminal block width 5 - 17.5 mm; stretchable 5 - 5.2 mm; plain; snap-on type; white	www.wago.com/793-5501
	Item no.: 793-5501/000-002 WMB marking card; as card; for terminal block width 5 - 17.5 mm; stretchable 5 - 5.2 mm; plain; snap-on type; yellow	www.wago.com/793-5501/000-002
	Item no.: 793-5501/000-005 WMB marking card; as card; for terminal block width 5 - 17.5 mm; stretchable 5 - 5.2 mm; plain; snap-on type; red	www.wago.com/793-5501/000-005
	Item no.: 793-5501/000-006 WMB marking card; as card; for terminal block width 5 - 17.5 mm; stretchable 5 - 5.2 mm; plain; snap-on type; blue	www.wago.com/793-5501/000-006
	Item no.: 793-5501/000-007 WMB marking card; as card; for terminal block width 5 - 17.5 mm; stretchable 5 - 5.2 mm; plain; snap-on type; gray	www.wago.com/793-5501/000-007
	Item no.: 793-5501/000-012 WMB marking card; as card; for terminal block width 5 - 17.5 mm; stretchable 5 - 5.2 mm; plain; snap-on type; orange	www.wago.com/793-5501/000-012
	Item no.: 793-5501/000-014 WMB marking card; as card; for terminal block width 5 - 17.5 mm; stretchable 5 - 5.2 mm; plain; snap-on	

Subject to changes. Please also observe the further product documentation!

WAGO Kontakttechnik GmbH & Co. KG
Hansastr. 27
32423 Minden
Phone: +49571 887-0 | Fax: +49571 887-169
Email: info.de@wago.com | Web: www.wago.com

Do you have any questions about our products?
We are always happy to take your call at +49 (571) 887-44222.

	type; brown	www.wago.com/793-5501/000-014
	Item no.: 793-5501/000-017 WMB marking card; as card; for terminal block width 5 - 17.5 mm; stretchable 5 - 5.2 mm; plain; snap-on type; green	www.wago.com/793-5501/000-017
	Item no.: 793-5501/000-023 WMB marking card; as card; for terminal block width 5 - 17.5 mm; stretchable 5 - 5.2 mm; plain; snap-on type; light green	www.wago.com/793-5501/000-023
	Item no.: 793-5501/000-024 WMB marking card; as card; for terminal block width 5 - 17.5 mm; stretchable 5 - 5.2 mm; plain; snap-on type; violet	www.wago.com/793-5501/000-024
	Item no.: 793-566 WMB marking card; as card; MARKED; 1 ... 50 (2x); not stretchable; Horizontal marking; snap-on type; white	www.wago.com/793-566
	Item no.: 793-566/000-002 WMB marking card; as card; MARKED; 1 ... 50 (2x); not stretchable; Horizontal marking; snap-on type; yellow	www.wago.com/793-566/000-002
	Item no.: 793-566/000-005 WMB marking card; as card; MARKED; 1 ... 50 (2x); not stretchable; Horizontal marking; snap-on type; red	www.wago.com/793-566/000-005
	Item no.: 793-566/000-006 WMB marking card; as card; MARKED; 1 ... 50 (2x); not stretchable; Horizontal marking; snap-on type; blue	www.wago.com/793-566/000-006
	Item no.: 793-566/000-007 WMB marking card; as card; MARKED; 1 ... 50 (2x); not stretchable; Horizontal marking; snap-on type; gray	www.wago.com/793-566/000-007
	Item no.: 793-566/000-012 WMB marking card; as card; MARKED; 1 ... 50 (2x); not stretchable; Horizontal marking; snap-on type; orange	www.wago.com/793-566/000-012
	Item no.: 793-566/000-017 WMB marking card; as card; MARKED; 1 ... 50 (2x); not stretchable; Horizontal marking; snap-on type; light green	www.wago.com/793-566/000-017
	Item no.: 793-566/000-023 WMB marking card; as card; MARKED; 1 ... 50 (2x); not stretchable; Horizontal marking; snap-on type; green	www.wago.com/793-566/000-023
	Item no.: 793-566/000-024 WMB marking card; as card; MARKED; 1 ... 50 (2x); not stretchable; Horizontal marking; snap-on type; violet	www.wago.com/793-566/000-024

tools

Subject to changes. Please also observe the further product documentation!

WAGO Kontakttechnik GmbH & Co. KG
Hansastr. 27
32423 Minden
Phone: +49571 887-0 | Fax: +49571 887-169
Email: info.de@wago.com | Web: www.wago.com

Do you have any questions about our products?
We are always happy to take your call at +49 (571) 887-44222.

Item no.: 210-719
Operating tool; Blade: 2.5 x 0.4 mm; with a partially insulated shaft

www.wago.com/210-719

Downloads

Documentation

Bid Text

858-517 GAEB docx - Datei	Feb 20, 2019	docx 17.8 kB	Download
858-517 GAEB X81 - Datei	Feb 19, 2019	xml 5.2 kB	Download

Instruction Leaflet

Stecksockel für Elementarrelais		pdf 2.6 MB	Download

Additional Information

Disposal; Electrical and electronic equipment, Packaging	V 1.0.0	pdf 265.8 kB	Download

CAD/CAE-Data

CAD data

2D/3D Models 858-517	URL	Download

CAE data

EPLAN Data Portal 858-517	URL	Download
WSCAD Universe 858-517	URL	Download

Installation Notes

Subject to changes. Please also observe the further product documentation!

WAGO Kontakttechnik GmbH & Co. KG
Hansastr. 27
32423 Minden
Phone: +49571 887-0 | Fax: +49571 887-169
Email: info.de@wago.com | Web: www.wago.com

Do you have any questions about our products?
We are always happy to take your call at +49 (571) 887-44222.

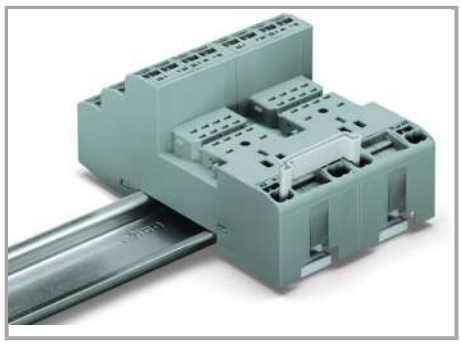

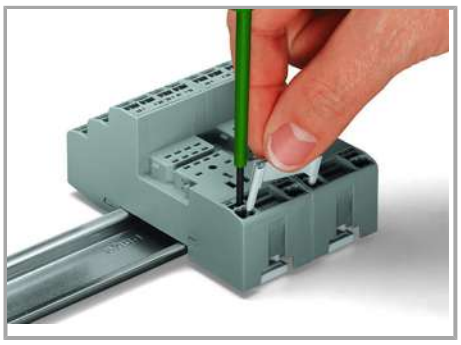

Remove jumper with screwdriver.

Marking

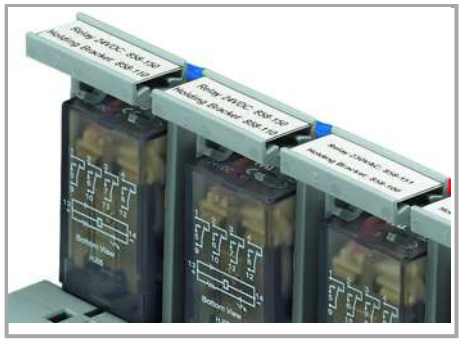

Marking using WMB Multi markers and group marker carriers

WAGO Kontakttechnik GmbH & Co. KG
Hansastr. 27
32423 Minden
Phone: +49571 887-0 | Fax: +49571 887-169
Email: info.de@wago.com | Web: www.wago.com

Do you have any questions about our products?
We are always happy to take your call at +49 (571) 887-44222.