Snap-in socket; 3-pole; Cod. B; 1,50 mm²; light green

www.wago.com/890-763_071-000

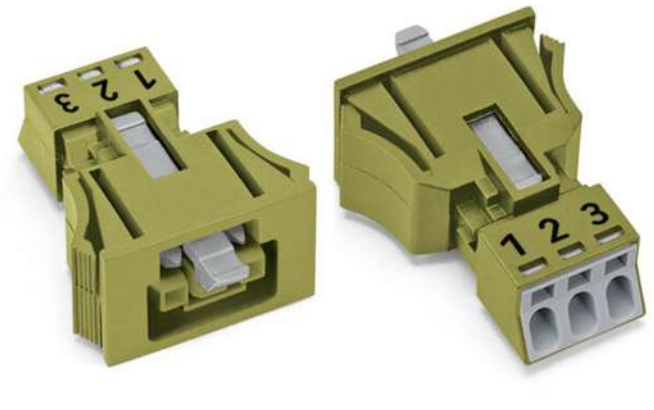

RoHS ✓ Compliant

BOMcheck.net

Color:

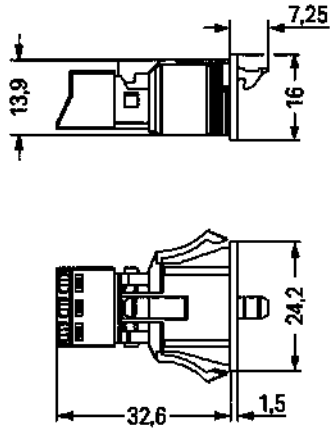

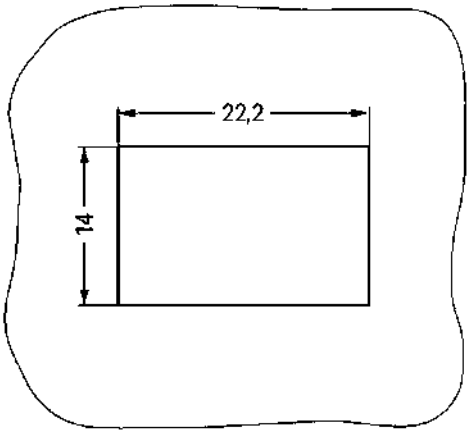

Plate thickness: 0.5 ... 2 mm
Cutout tolerance: + 0.1 mm

Item description

- Protected against mismating and maintenance-free
- Push-in CAGE CLAMP® spring pressure connection technology allows solid conductors to be simply pushed into a unit
- Compact design with 4.4 mm pole spacing

Subject to changes. Please also observe the further product documentation!

WAGO Kontakttechnik GmbH & Co. KG
Hansastr. 27
32423 Minden
Phone: +49571 887-0 | Fax: +49571 887-169
Email: info.de@wago.com | Web: www.wago.com

Do you have any questions about our products?
We are always happy to take your call at +49 (571) 887-44222.

- Components can be clearly printed on and color-coded to meet custom requirements
- When assembled, the installation connectors complies with IP40 and are suitable for easily accessible areas

Note:
All connectors for mounted installations (snap-in versions for lighting fixtures or devices, all types of PCB and distribution connectors) are factory-equipped with locking levers to ensure plugs and sockets are securely locked. Additional locking levers are only required for flying leads (plug /socket).
Note on mismating protection:
All WINSTA® components are 100% protected against mismating when:
a.) plugging different numbers of poles
b.) plugging while rotated 180
c.) plugging while laterally staggered
d.) plugging one pole
Safety information 1:
Application note for the U.S. market (USR): Some versions may also be used for current interruption in accordance with the UL certificate in select applications with currents below 5 A and voltages up to 600 V. For further information, please contact your local sales office.

Data

Electrical data

Note on Contact Resistance	approx. 1 mΩ of contact resistance approx. 0.25 mΩ contact transition plug/socket

Ratings per IEC/EN 60664-1

Ratings per	IEC/EN 60664-1
Rated voltage (III / 3)	250 V
Rated impulse voltage (III / 3)	4 kV
Rated current	16 A
Note on rated current	13 A for 3-pole load
Legend (ratings)	(III / 3) ≙ Overvoltage category III / Pollution degree 3

Approvals per UL 1977

Rated voltage per UL 1977 (factory wiring only)	600 V
Rated current per UL 1977 (factory wiring only)	14 A

Connection data

Connection technology	Push-in CAGE CLAMP®
Actuation type	Operating tool Push-in
Nominal cross section	1,5 mm²

Subject to changes. Please also observe the further product documentation!

WAGO Kontakttechnik GmbH & Co. KG
Hansastr. 27
32423 Minden
Phone: +49571 887-0 | Fax: +49571 887-169
Email: info.de@wago.com | Web: www.wago.com

Do you have any questions about our products?
We are always happy to take your call at +49 (571) 887-44222.

Solid conductor	0,25 … 1,5 mm² / 22 … 16 AWG
Solid conductor, push-in termination	0,75 … 1,5 mm² / 20 … 16 AWG
Stranded conductor	0,25 … 1 mm² / 22 … 18 AWG
Fine-stranded conductor	0,25 … 1,5 mm² / 22 … 16 AWG
Fine-stranded conductor with ferrule with plastic collar	0,25 … 0,75 mm² / 22 … 20 AWG
Fine-stranded conductor with ferrule without plastic collar	0,25 … 0,75 mm² / 22 … 20 AWG
Fine-stranded conductor with ferrule, push-in termination, from	0,75 mm² / 20 AWG
Strip length	9 mm / 0.35 inch
Note (strip length)	see also packaging or instructions
No. of poles	3
Total number of connection points	3
Total number of potentials	3
Conductor entry direction to mating direction	0 °

Geometrical Data

Pin spacing	4,4 mm / 0.173 inch
Width	24,2 mm / 0.953 inch
Height	16 mm / 0.63 inch
Depth	39,85 mm / 1.569 inch

Mechanical data

Coding	B
Mating force of a plug-in connection	approx. 20 … 70 N (depending on pole number)
Retention force of a plug-in connection	Locked: > 80 N
Unmating force of a plug-in connection	Unlocked: approx. 20 … 70 N (depending on pole number)
Number of mating cycles	200, without resistive load 100, with resistive load I_N = 16 A, tested (1.5 mm²/16 AWG)
Gehäuseblechstärke	0,5 … 2 mm / 0.02 … 0.079 inch
Mounting type	Snap-in
Marking	U+ X/Y U-
Protection class	IP40
Potential marking	U+ X/Y U-

Subject to changes. Please also observe the further product documentation!

WAGO Kontakttechnik GmbH & Co. KG
Hansastr. 27
32423 Minden
Phone: +49571 887-0 | Fax: +49571 887-169
Email: info.de@wago.com | Web: www.wago.com

Do you have any questions about our products?
We are always happy to take your call at +49 (571) 887-44222.

Plug connection

Contact type (pluggable connector)	Female connector/socket
Connector connection type	for conductor
Mismating protection	Yes
Locking of plug-in connection	locking lever
Locking lever	yes

Material Data

Color	light green
Insulating material	Polyamide 66 (PA 66)
Clamping spring material	Chrome nickel spring steel (CrNi)
Contact material	Copper or copper alloy (surface-treated)
Weight	6 g

Environmental Requirements

Processing temperature	-5 … +40 °C
Continuous operating temperature	-35 … +85 °C
Note on Continuous Service Temperature	Insulating parts for temperatures ≤ 105 °C

Commercial data

Packaging type	BOX
Country of origin	PL
GTIN	4055143427760
Customs Tariff No.	85366990990

Approvals / Certificates

Country specific Approvals

Logo	Approval	Additional Approval Text	Certificate name
	CB DEKRA Certification B.V.	EN 61984	71-100413

Ship Approvals

Logo	Approval	Additional Approval Text	Certificate name

Subject to changes. Please also observe the further product documentation!

WAGO Kontakttechnik GmbH & Co. KG
Hansastr. 27
32423 Minden
Phone: +49571 887-0 | Fax: +49571 887-169
Email: info.de@wago.com | Web: www.wago.com

Do you have any questions about our products?
We are always happy to take your call at +49 (571) 887-44222.

LR Lloyds Register	EN 61535	08/20047 (E2)

Counterpart

Item no.890-273/071-000
Plug; 3-pole; 1,50 mm²; light green

www.wago.com/890-273/071-000

Compatible products

protection

Item no.: 890-643
Lockout cap; 3-pole; for cutouts; Plastic; black

www.wago.com/890-643

Item no.: 890-693
Lockout cap; 3-pole; for cutouts; Plastic; white

www.wago.com/890-693

tools

Item no.: 210-719
Operating tool; Blade: 2.5 x 0.4 mm; with a partially insulated shaft

www.wago.com/210-719

Item no.: 890-383
Operating tool; 3-way; green

www.wago.com/890-383

Downloads

Documentation

Bid Text

890-763/071-000 GAEB X81 - Datei	Feb 19, 2019	xml 3.0 kB	Download
890-763/071-000 doc - Datei	Nov 30, 2018	doc 23.6 kB	Download

CAD/CAE-Data

CAD data

2D/3D Models 890-763/071-000	URL	Download

Subject to changes. Please also observe the further product documentation!

WAGO Kontakttechnik GmbH & Co. KG
Hansastr. 27
32423 Minden
Phone: +49571 887-0 | Fax: +49571 887-169
Email: info.de@wago.com | Web: www.wago.com

Do you have any questions about our products?
We are always happy to take your call at +49 (571) 887-44222.

CAE data

EPLAN Data Portal 890-763/071-000	URL	Download
WSCAD Universe 890-763/071-000	URL	Download

Installation Notes

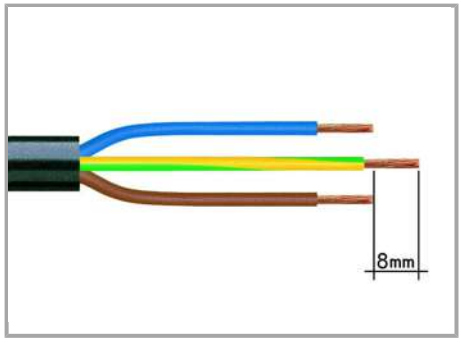

1. Strip length, outer insulation = 30 mm (2-pole), 37 mm (3-pole), 45 mm (4- and 5-pole)

2. Strip length = 9 mm

3. Extended ground conductor = 8 mm

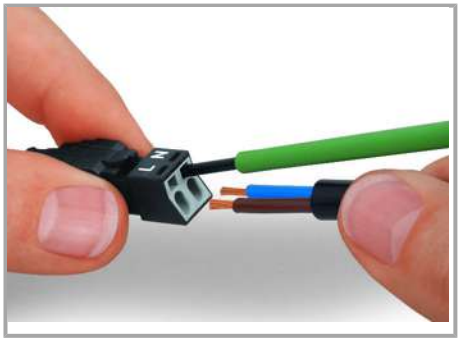

To terminate fine-stranded conductors, open the clamping unit via screwdriver (2.5 mm blade width) and insert a stripped conductor until it hits backstop. Terminate solid conductors by simply pushing them in.

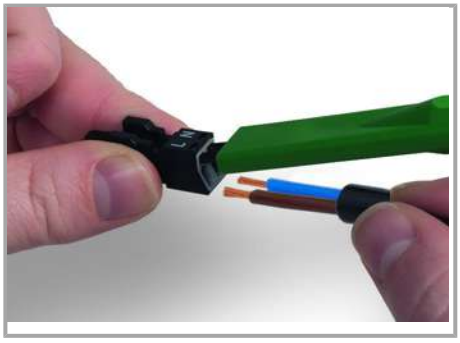

To terminate fine-stranded conductors, open clamping units via operating tool (890-382) and insert stripped conductors until they hit backstop.

Terminate solid conductors by simply pushing them in.

Subject to changes. Please also observe the further product documentation!

WAGO Kontakttechnik GmbH & Co. KG
Hansastr. 27
32423 Minden
Phone: +49571 887-0 | Fax: +49571 887-169
Email: info.de@wago.com | Web: www.wago.com

Do you have any questions about our products?
We are always happy to take your call at +49 (571) 887-44222.

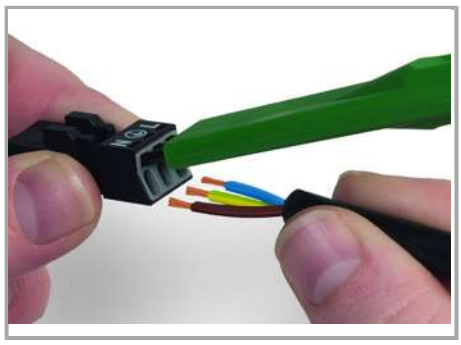

To terminate fine-stranded conductors, open clamping units via operating tool (890-383) and insert stripped conductors until they hit backstop.

Terminate solid conductors by simply pushing them in.

Mismating protection

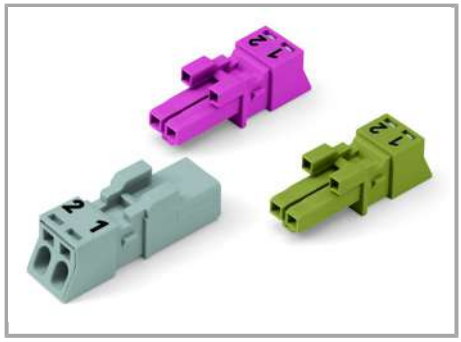

B-coded connectors with different colors can be plugged together.

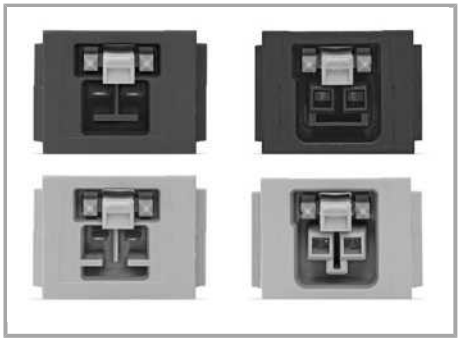

B-coded connectors (shown in gray) not only differ in color, but also in their design, making them incompatible with other coded connectors.

Important note:
Different colors and/or pole marking are used for circuit identification.
Only connectors of the same color and same pole marking must be plugged together.

Product family

WINSTA® MINI special
Show all products from the family

Subject to changes. Please also observe the further product documentation!

WAGO Kontakttechnik GmbH & Co. KG
Hansastr. 27
32423 Minden
Phone: +49571 887-0 | Fax: +49571 887-169
Email: info.de@wago.com | Web: www.wago.com

Do you have any questions about our products?
We are always happy to take your call at +49 (571) 887-44222.