Data sheet | Item number: 2091-1152/000-5000

1-conductor THT female header; 1.0 mm Ø solder pin; straight; Gripping plate; direct marking; 1.5 mm²; Pin spacing 3.5 mm; 2-pole; 1,50 mm²; light gray

www.wago.com/2091-1152_000-5000

RoHS Compliant ✓ BOMcheck.net Color:

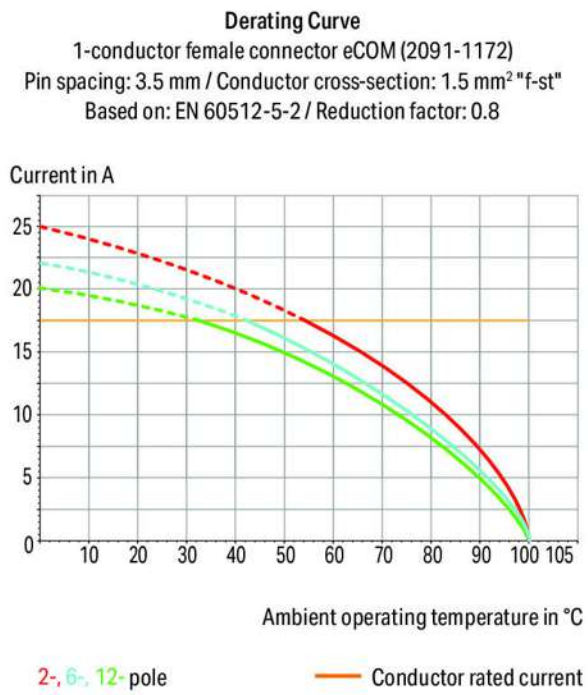

Subject to changes. Please also observe the further product documentation!

WAGO Kontakttechnik GmbH & Co. KG
Hansastr. 27
32423 Minden
Phone: +49571 887-0 | Fax: +49571 887-169
Email: info.de@wago.com | Web: www.wago.com

Do you have any questions about our products?
We are always happy to take your call at +49 (571) 887-44222.

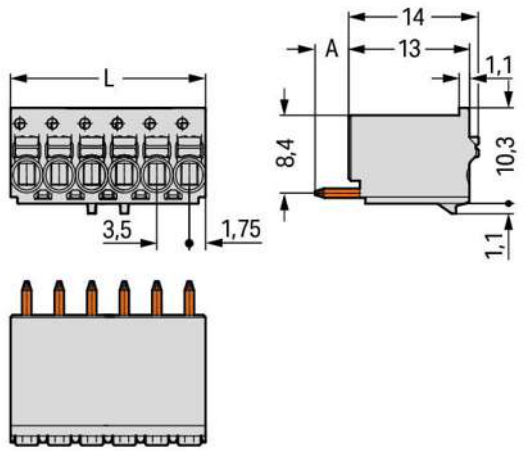

L = (pole number x pin spacing)

A = 3.6 mm THT solder pin

A = 2.4 mm THR solder pin

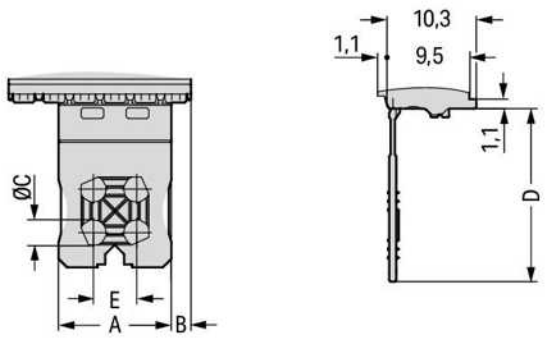

Item description

- Universal connection for all conductor types
- Simple, push-in termination of solid and ferruled conductors
- Easy-to-use design does not require special tools
- Ability to wire while mated or unmated
- Integrated test ports for testing parallel to conductor entry
- Custom-installed solder pins

Safety information 1:

The **picoMAX® Pluggable Connection System** includes connectors without breaking capacity in accordance with DIN EN 61984. When used as intended, these connectors must not be connected/disconnected when live or under load. The circuit design should ensure header pins, which can be touched, are not live when unmated.

Data

Electrical data

Subject to changes. Please also observe the further product documentation!

WAGO Kontakttechnik GmbH & Co. KG
Hansastr. 27
32423 Minden
Phone: +49571 887-0 | Fax: +49571 887-169
Email: info.de@wago.com | Web: www.wago.com

Do you have any questions about our products?
We are always happy to take your call at +49 (571) 887-44222.

Ratings per IEC/EN 60664-1

Ratings per	IEC/EN 60664-1
Rated voltage (III / 3)	160 V
Rated impulse voltage (III / 3)	2.5 kV
Rated voltage (III / 2)	160 V
Rated impulse voltage (III / 2)	2.5 kV
Rated voltage (II / 2)	320 V
Rated impulse voltage (II / 2)	2.5 kV
Rated current	10 A
Legend (ratings)	(III / 2) ≙ Overvoltage category III / Pollution degree 2

Approvals per UL 1059

Rated voltage UL (Use Group B)	300 V
Rated current UL (Use Group B)	10 A
Rated voltage UL (Use Group D)	300 V
Rated current UL (Use Group D)	10 A
Approvals per	UL 1059

Connection data

Connection technology	Push-in CAGE CLAMP®
Actuation type	Push-button
Solid conductor	0,2 … 1,5 mm² / 24 … 14 AWG
Fine-stranded conductor	0,2 … 1,5 mm² / 24 … 14 AWG
Fine-stranded conductor with ferrule with plastic collar	0,25 … 0,75 mm²
Fine-stranded conductor with ferrule without plastic collar	0,25 … 1,5 mm²
Strip length	8 … 9 mm / 0.31 … 0.35 inch
Conductor entry angle to the PCB	90 °
No. of poles	2
Total number of connection points	2
Total number of potentials	2
Number of connection types	1
Number of levels	1

Geometrical Data

Pin spacing	3,5 mm / 0.138 inch

Subject to changes. Please also observe the further product documentation!

WAGO Kontakttechnik GmbH & Co. KG
Hansastr. 27
32423 Minden
Phone: +49571 887-0 | Fax: +49571 887-169
Email: info.de@wago.com | Web: www.wago.com

Do you have any questions about our products?
We are always happy to take your call at +49 (571) 887-44222.

Width	7 mm / 0.276 inch
Height	30 mm / 1.181 inch
Depth	11,4 mm / 0.449 inch
Solder pin length	3.6 mm
Solder pin diameter	1 mm
Drilled hole diameter (tolerance)	1,2 $^{(+0,1)}$ mm

Mechanical data

Design	With gripping plate

Plug connection

Contact type (pluggable connector)	Female connector/socket
Connector connection type	for PCB
Mismating protection	No
Mating direction to the PCB	90 °

PCB contact

PCB contact	THT

Material Data

Color	light gray
Material group	I
Insulating material	Polyphthalamide (PPA GF)
Flammability class per UL94	V0
Clamping spring material	Chrome nickel spring steel (CrNi)
Contact material	Electrolytic copper (E_{Cu})
Contact plating	tin-plated
Fire load	0.023 MJ
Weight	1.1 g

Environmental Requirements

Limit temperature range	-60 … +100 °C

Commercial data

Packaging type	BOX

Subject to changes. Please also observe the further product documentation!

WAGO Kontakttechnik GmbH & Co. KG
Hansastr. 27
32423 Minden
Phone: +49571 887-0 | Fax: +49571 887-169
Email: info.de@wago.com | Web: www.wago.com

Do you have any questions about our products?
We are always happy to take your call at +49 (571) 887-44222.

Country of origin	DE
GTIN	4050821366508
Customs Tariff No.	85366990990

Approvals / Certificates

Country specific Approvals

Logo	Approval	Additional Approval Text	Certificate name
	CSA DEKRA Certification B.V.	C22.2	2362521
	KEMA/KEUR DEKRA Certification B.V.	EN 61984	71-102260 REV.1

UL-Approvals

Logo	Approval	Additional Approval Text	Certificate name
	UL Underwriters Laboratories Inc.	UL 1977	20190909-E45171

Counterpart

Compatible products

Coding

	Item no.: 2091-1610 Coding key carrier; suitable for 3.5 mm pin spacing; orange	www.wago.com/2091-1610

check

	Item no.: 735-500 Test pin; 1 mm Ø; with solder connection for test wire	www.wago.com/735-500

tools

	Item no.: 210-719 Operating tool; Blade: 2.5 x 0.4 mm; with a partially insulated shaft	www.wago.com/210-719

Subject to changes. Please also observe the further product documentation!

WAGO Kontakttechnik GmbH & Co. KG
Hansastr. 27
32423 Minden
Phone: +49571 887-0 | Fax: +49571 887-169
Email: info.de@wago.com | Web: www.wago.com

Do you have any questions about our products?
We are always happy to take your call at +49 (571) 887-44222.

Downloads

Documentation

Additional Information

Technical explanations	Apr 3, 2019	pdf 3.6 MB	Download

CAD/CAE-Data

PCB Design

Symbol and Footprint 2091-1152/000-5000 CAx data for your PCB design, consisting of "schematic symbols and PCB footprints", allow easy integration of the WAGO component into your development environment.	URL	Download

Supported formats:

- Accel EDA 14 & 15
- Altium 6 to current version
- Cadence Allegro
- DesignSpark
- Eagle Libraries
- KiCad
- Mentor Graphics BoardStation
- Mentor Graphics Design Architect
- Mentor Graphics Design Expedition 99 and 2000
- OrCAD 9.X PCB and Capture
- PADS PowerPCB 3, 3.5, 4.X, and 5.X
- PADS PowerPCB and PowerLogic 3.0
- PCAD 2000, 2001, 2002, 2004, and 2006
- Pulsonix 8.5 or newer
- STL
- 3D STEP
- TARGET 3001!
- View Logic ViewDraw
- Quadcept
- Zuken CadStar 3 and 4
- Zuken CR-5000 and CR-8000

PCB Component Libraries (EDA), PCB CAD Library Ultra Librarian

Subject to changes. Please also observe the further product documentation!

WAGO Kontakttechnik GmbH & Co. KG
Hansastr. 27
32423 Minden
Phone: +49571 887-0 | Fax: +49571 887-169
Email: info.de@wago.com | Web: www.wago.com

Do you have any questions about our products?
We are always happy to take your call at +49 (571) 887-44222.

Installation Notes

Conductor termination

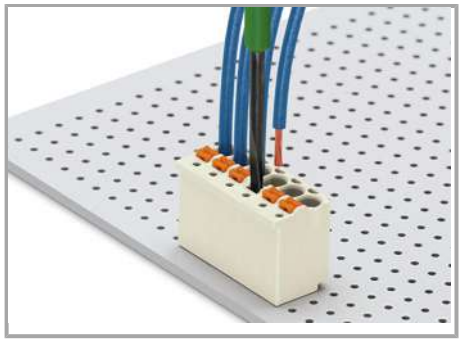

Terminating fine-stranded conductors and removing all conductor types via push-buttons.

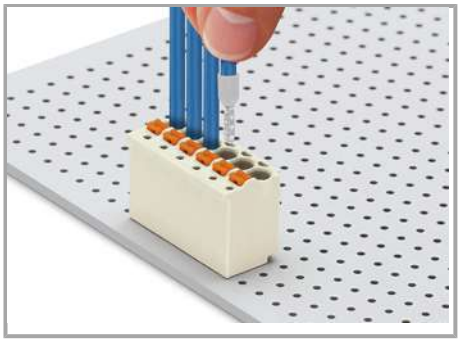

Terminating solid and ferruled conductors via push-in termination

Marking

Pole marking via direct printing perpendicular to conductor entry.

Pole marking via factory direct printing.

Testing

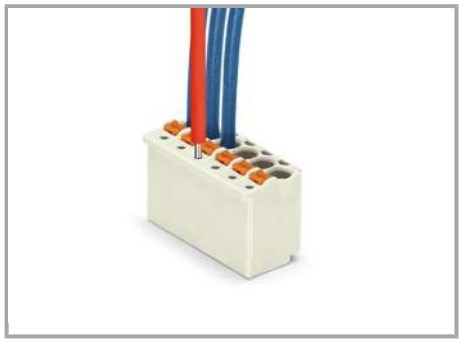

Testing with 1 mm Ø test pin, tip contact.

Subject to changes. Please also observe the further product documentation!

WAGO Kontakttechnik GmbH & Co. KG
Hansastr. 27
32423 Minden
Phone: +49571 887-0 | Fax: +49571 887-169
Email: info.de@wago.com | Web: www.wago.com

Do you have any questions about our products?
We are always happy to take your call at +49 (571) 887-44222.

Product family

picoMAX eCOM
Show all products from the family

Subject to changes. Please also observe the further product documentation!

WAGO Kontakttechnik GmbH & Co. KG
Hansastr. 27
32423 Minden
Phone: +49571 887-0 | Fax: +49571 887-169
Email: info.de@wago.com | Web: www.wago.com

Do you have any questions about our products?
We are always happy to take your call at +49 (571) 887-44222.