1-conductor male connector; Gripping plate; 1.5 mm²; Pin spacing 3.5 mm; 2-pole; 1,50 mm²; light gray

www.wago.com/2091-1502_002-000

RoHS ✓ Compliant

BOMcheck.net

Color:

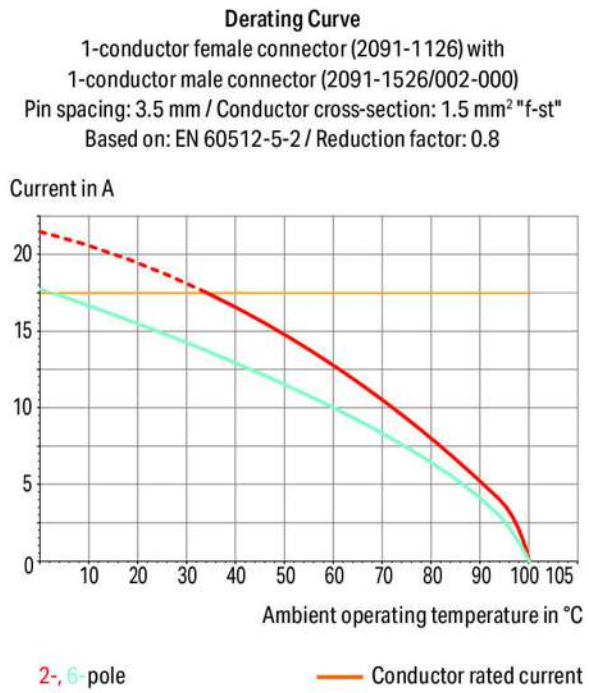

Subject to changes. Please also observe the further product documentation!

WAGO Kontakttechnik GmbH & Co. KG
Hansastr. 27
32423 Minden
Phone: +49571 887-0 | Fax: +49571 887-169
Email: info.de@wago.com | Web: www.wago.com

Do you have any questions about our products?
We are always happy to take your call at +49 (571) 887-44222.

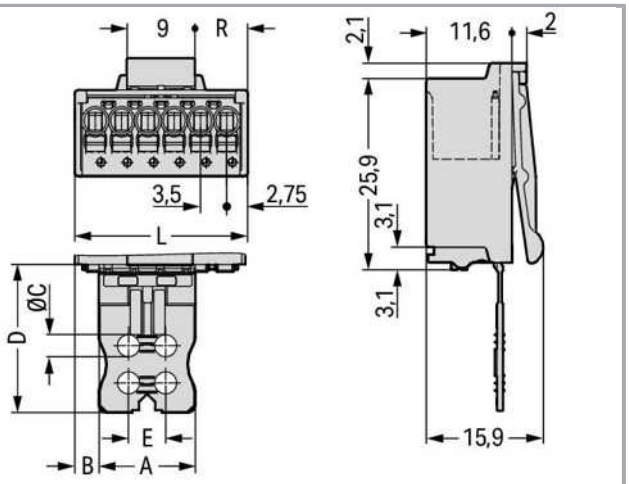

L = (pole no. + pin spacing) + 2 mm

Even pole numbers: R = (L – 9 mm): 2

Odd pole numbers: R = (L – 12.5 mm): 2

Item description

- Universal connection for all conductor types
- Simple, push-in termination of solid and ferruled conductors
- Easy-to-use design does not require special tools
- Testing parallel to conductor entry – tip contact
- For “wire-to-wire” and “board-to-wire” connections
- Integrated release lever

Safety information 1:

The **picoMAX® pluggable connection system** is designed without breaking capacity for compliance with DIN EN 61984. When used as intended, MCS Connectors shall not be connected/disconnected when live or under load. The circuit design should ensure header pins, which can be touched, are not live when unmated.

Data

Electrical data

WAGO Kontakttechnik GmbH & Co. KG
Hansastr. 27
32423 Minden
Phone: +49571 887-0 | Fax: +49571 887-169
Email: info.de@wago.com | Web: www.wago.com

Do you have any questions about our products?
We are always happy to take your call at +49 (571) 887-44222.

Ratings per IEC/EN 60664-1

Ratings per	IEC/EN 60664-1
Rated voltage (III / 3)	160 V
Rated impulse voltage (III / 3)	2.5 kV
Rated voltage (III / 2)	160 V
Rated impulse voltage (III / 2)	2.5 kV
Rated voltage (II / 2)	320 V
Rated impulse voltage (II / 2)	2.5 kV
Rated current	10 A
Legend (ratings)	(III / 2) ≙ Overvoltage category III / Pollution degree 2

Approvals per UL 1059

Rated voltage UL (Use Group B)	300 V
Rated current UL (Use Group B)	10 A
Rated voltage UL (Use Group D)	300 V
Rated current UL (Use Group D)	10 A
Approvals per	UL 1059

Connection data

Connection technology	Push-in CAGE CLAMP®
Actuation type	Push-button
Solid conductor	0,2 … 1,5 mm² / 24 … 14 AWG
Fine-stranded conductor	0,2 … 1,5 mm² / 24 … 14 AWG
Fine-stranded conductor with ferrule with plastic collar	0,25 … 0,75 mm²
Fine-stranded conductor with ferrule without plastic collar	0,25 … 1,5 mm²
Strip length	8 … 9 mm / 0.31 … 0.35 inch
No. of poles	2
Total number of connection points	2
Total number of potentials	2
Number of connection types	1
Number of levels	1

Geometrical Data

Pin spacing	3,5 mm / 0.138 inch
Width	9 mm / 0.354 inch

Subject to changes. Please also observe the further product documentation!

WAGO Kontakttechnik GmbH & Co. KG
Hansastr. 27
32423 Minden
Phone: +49571 887-0 | Fax: +49571 887-169
Email: info.de@wago.com | Web: www.wago.com

Do you have any questions about our products?
We are always happy to take your call at +49 (571) 887-44222.

Height	15,9 mm / 0.626 inch
Depth	44 mm / 1.732 inch

Mechanical data

Design	With gripping plate

Plug connection

Contact type (pluggable connector)	Male connector/plug
Connector connection type	for conductors
Mismating protection	No
Locking of plug-in connection	Male locking latch

Material Data

Color	light gray
Material group	I
Insulating material	Polyphthalamide (PPA GF)
Flammability class per UL94	V0
Clamping spring material	Chrome nickel spring steel (CrNi)
Contact material	Electrolytic copper (E_{Cu})
Contact plating	tin-plated
Fire load	0.072 MJ
Weight	2.8 g

Environmental Requirements

Limit temperature range	-60 … +100 °C

Commercial data

Product Group	26 (picoMAX)
Packaging type	BOX
Country of origin	DE
GTIN	4050821161318
Customs Tariff No.	85366990990

Approvals / Certificates

Country specific Approvals

Certificate

Subject to changes. Please also observe the further product documentation!

WAGO Kontakttechnik GmbH & Co. KG
Hansastr. 27
32423 Minden
Phone: +49571 887-0 | Fax: +49571 887-169
Email: info.de@wago.com | Web: www.wago.com

Do you have any questions about our products?
We are always happy to take your call at +49 (571) 887-44222.

Logo	Approval	Additional Approval Text	name
	CSA DEKRA Certification B.V.	C22.2	2362521

UL-Approvals

Logo	Approval	Additional Approval Text	Certificate name
	UL Underwriters Laboratories Inc.	UL 1977	20190909-E45171

Counterpart

Item no.2091-1122
1-conductor female plug; 1.5 mm²; Pin spacing 3.5 mm; 2-pole; 1,50 mm²; light gray
www.wago.com/2091-1122

Item no.2091-1302
THT female header; 0.4 x 0.9 mm solder pin; straight; Pin spacing 3.5 mm; 2-pole; light gray
www.wago.com/2091-1302

Item no.2091-1322
THT female header; 0.4 x 0.9 mm solder pin; angled; Pin spacing 3.5 mm; 2-pole; light gray
www.wago.com/2091-1322

Compatible products

Coding

Item no.: 2091-1610
Coding key carrier; suitable for 3.5 mm pin spacing; orange
www.wago.com/2091-1610

Downloads

Documentation

Additional Information

Technical explanations	Apr 3, 2019	pdf 3.6 MB	Download

Subject to changes. Please also observe the further product documentation!

WAGO Kontakttechnik GmbH & Co. KG
Hansastr. 27
32423 Minden
Phone: +49571 887-0 | Fax: +49571 887-169
Email: info.de@wago.com | Web: www.wago.com

Do you have any questions about our products?
We are always happy to take your call at +49 (571) 887-44222.

CAD/CAE-Data

CAD data

2D/3D Models 2091-1502/002-000	URL	Download

Installation Notes

Product family

picoMAX
Show all products from the family

Subject to changes. Please also observe the further product documentation!

WAGO Kontakttechnik GmbH & Co. KG
Hansastr. 27
32423 Minden
Phone: +49571 887-0 | Fax: +49571 887-169
Email: info.de@wago.com | Web: www.wago.com

Do you have any questions about our products?
We are always happy to take your call at +49 (571) 887-44222.