Data sheet | Item number: 2092-1152/000-5000

1-conductor THT female header; 1.4 mm Ø solder pin; straight; Gripping plate; direct marking; 2.5 mm²; Pin spacing 5 mm; 2-pole; 2,50 mm²; light gray

www.wago.com/2092-1152_000-5000

RoHS ✓ Compliant

BOMcheck.net

Color:

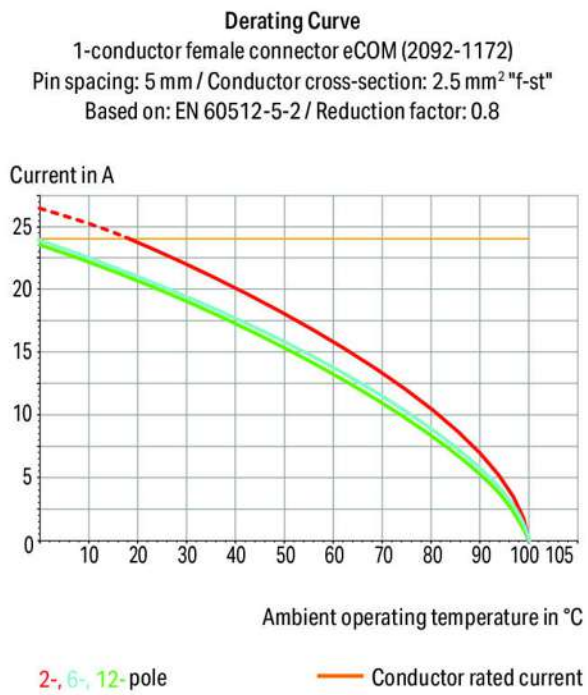

Subject to changes. Please also observe the further product documentation!

WAGO Kontakttechnik GmbH & Co. KG
Hansastr. 27
32423 Minden
Phone: +49571 887-0 | Fax: +49571 887-169
Email: info.de@wago.com | Web: www.wago.com

Do you have any questions about our products?
We are always happy to take your call at +49 (571) 887-44222.

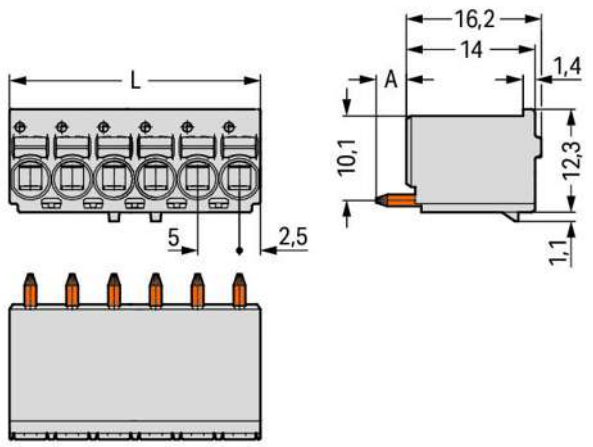

L = (pole number x pin spacing)

A = 3.6 mm THT solder pin

A = 2.4 mm THR solder pin

Item description

- Universal connection for all conductor types
- Simple, push-in termination of solid and ferruled conductors
- Easy-to-use design does not require special tools
- Ability to wire while mated or unmated
- Integrated test ports for testing parallel to conductor entry
- Custom-installed solder pins

Safety information 1:

The **picoMAX® Pluggable Connection System** includes connectors without breaking capacity in accordance with DIN EN 61984. When used as intended, these connectors must not be connected/disconnected when live or under load. The circuit design should ensure header pins, which can be touched, are not live when unmated.

Data

Electrical data

WAGO Kontakttechnik GmbH & Co. KG
Hansastr. 27
32423 Minden
Phone: +49571 887-0 | Fax: +49571 887-169
Email: info.de@wago.com | Web: www.wago.com

Do you have any questions about our products?
We are always happy to take your call at +49 (571) 887-44222.

Ratings per IEC/EN 60664-1

Ratings per	IEC/EN 60664-1
Rated voltage (III / 3)	250 V
Rated impulse voltage (III / 3)	4 kV
Rated voltage (III / 2)	320 V
Rated impulse voltage (III / 2)	4 kV
Rated voltage (II / 2)	630 V
Rated impulse voltage (II / 2)	4 kV
Rated current	16 A
Legend (ratings)	(III / 2) ≙ Overvoltage category III / Pollution degree 2

Approvals per UL 1059

Rated voltage UL (Use Group B)	300 V
Rated current UL (Use Group B)	15 A
Rated voltage UL (Use Group D)	300 V
Rated current UL (Use Group D)	10 A
Approvals per	UL 1059

Connection data

Connection technology	Push-in CAGE CLAMP®
Actuation type	Push-button
Solid conductor	0,2 … 2,5 mm² / 24 … 12 AWG
Fine-stranded conductor	0,2 … 2,5 mm² / 24 … 12 AWG
Fine-stranded conductor with ferrule with plastic collar	0,25 … 1,5 mm²
Fine-stranded conductor with ferrule without plastic collar	0,25 … 2,5 mm²
Strip length	9 … 10 mm / 0.35 … 0.39 inch
Conductor entry angle to the PCB	90 °
No. of poles	2
Total number of connection points	2
Total number of potentials	2
Number of connection types	1
Number of levels	1

Geometrical Data

Pin spacing	5 mm / 0.197 inch

Subject to changes. Please also observe the further product documentation!

WAGO Kontakttechnik GmbH & Co. KG
Hansastr. 27
32423 Minden
Phone: +49571 887-0 | Fax: +49571 887-169
Email: info.de@wago.com | Web: www.wago.com

Do you have any questions about our products?
We are always happy to take your call at +49 (571) 887-44222.

Width	10 mm / 0.394 inch
Height	34 mm / 1.339 inch
Depth	13,4 mm / 0.528 inch
Solder pin length	3.6 mm
Solder pin diameter	1.4 mm
Drilled hole diameter (tolerance)	1,6 $^{(+0,1)}$ mm

Mechanical data

Design	With gripping plate

Plug connection

Contact type (pluggable connector)	Female connector/socket
Connector connection type	for PCB
Mismating protection	No
Mating direction to the PCB	90 °

PCB contact

PCB contact	THT

Material Data

Color	light gray
Material group	I
Insulating material	Polyphthalamide (PPA GF)
Flammability class per UL94	V0
Clamping spring material	Chrome nickel spring steel (CrNi)
Contact material	Electrolytic copper (E_{Cu})
Contact plating	tin-plated
Fire load	0.048 MJ
Weight	2.4 g

Environmental Requirements

Limit temperature range	-60 … +100 °C

Commercial data

Packaging type	BOX

Subject to changes. Please also observe the further product documentation!

WAGO Kontakttechnik GmbH & Co. KG
Hansastr. 27
32423 Minden
Phone: +49571 887-0 | Fax: +49571 887-169
Email: info.de@wago.com | Web: www.wago.com

Do you have any questions about our products?
We are always happy to take your call at +49 (571) 887-44222.

Country of origin	DE
GTIN	4050821357445
Customs Tariff No.	85366990990

Approvals / Certificates

Country specific Approvals

Logo	Approval	Additional Approval Text	Certificate name
	CSA DEKRA Certification B.V.	C22.2	2362521

UL-Approvals

Logo	Approval	Additional Approval Text	Certificate name
	UL Underwriters Laboratories Inc.	UL 1977	20190909-E45171

Counterpart

Compatible products

check

	Item no.: 735-500 Test pin; 1 mm Ø; with solder connection for test wire	www.wago.com/735-500

tools

	Item no.: 210-719 Operating tool; Blade: 2.5 x 0.4 mm; with a partially insulated shaft	www.wago.com/210-719

Downloads

Documentation

Additional Information

Technical explanations	Apr 3, 2019	pdf 3.6 MB	Download

Subject to changes. Please also observe the further product documentation!

WAGO Kontakttechnik GmbH & Co. KG
Hansastr. 27
32423 Minden
Phone: +49571 887-0 | Fax: +49571 887-169
Email: info.de@wago.com | Web: www.wago.com

Do you have any questions about our products?
We are always happy to take your call at +49 (571) 887-44222.

CAD/CAE-Data

PCB Design

Symbol and Footprint 2092-1152/000-5000	URL	Download

CAx data for your PCB design, consisting of "schematic symbols and PCB footprints", allow easy integration of the WAGO component into your development environment.

Supported formats:

- Accel EDA 14 & 15
- Altium 6 to current version
- Cadence Allegro
- DesignSpark
- Eagle Libraries
- KiCad
- Mentor Graphics BoardStation
- Mentor Graphics Design Architect
- Mentor Graphics Design Expedition 99 and 2000
- OrCAD 9.X PCB and Capture
- PADS PowerPCB 3, 3.5, 4.X, and 5.X
- PADS PowerPCB and PowerLogic 3.0
- PCAD 2000, 2001, 2002, 2004, and 2006
- Pulsonix 8.5 or newer
- STL
- 3D STEP
- TARGET 3001!
- View Logic ViewDraw
- Quadcept
- Zuken CadStar 3 and 4
- Zuken CR-5000 and CR-8000

PCB Component Libraries (EDA), PCB CAD Library Ultra Librarian

Installation Notes

Conductor termination

Subject to changes. Please also observe the further product documentation!

WAGO Kontakttechnik GmbH & Co. KG
Hansastr. 27
32423 Minden
Phone: +49571 887-0 | Fax: +49571 887-169
Email: info.de@wago.com | Web: www.wago.com

Do you have any questions about our products?
We are always happy to take your call at +49 (571) 887-44222.

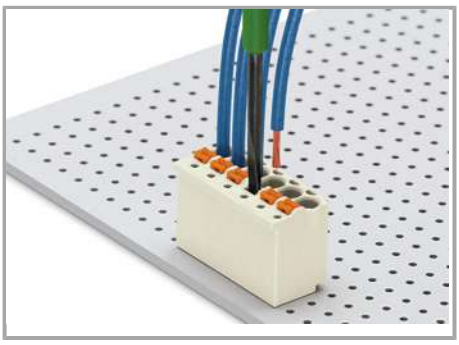

Terminating fine-stranded conductors and removing all conductor types via push-buttons.

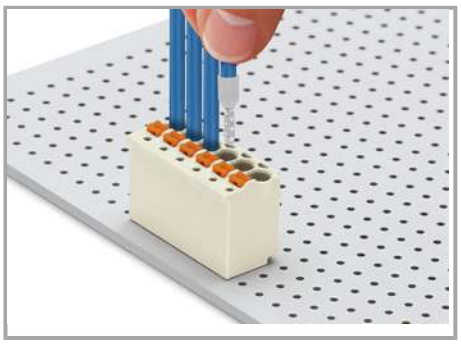

Terminating solid and ferruled conductors via push-in termination

Marking

Pole marking via direct printing perpendicular to conductor entry.

Pole marking via factory direct printing.

Testing

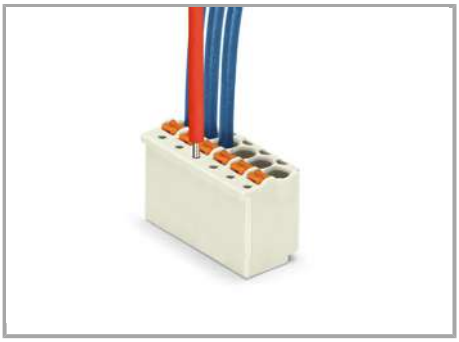

Testing with 1 mm Ø test pin, tip contact.

Product family

picoMAX eCOM
Show all products from the family

Subject to changes. Please also observe the further product documentation!

WAGO Kontakttechnik GmbH & Co. KG
Hansastr. 27
32423 Minden
Phone: +49571 887-0 | Fax: +49571 887-169
Email: info.de@wago.com | Web: www.wago.com

Do you have any questions about our products?
We are always happy to take your call at +49 (571) 887-44222.