Data sheet | Item number: 2202-1911/1000-541

TOPJOB®S fuse terminal block with Push-buttons; with pivoting fuse holder for 5 x 20 mm miniature metric fuse; with LED blown fuse indication; rail mount; 2-conductor; 5.2 mm wide; gray, 12 - 30 V

www.wago.com/2202-1911_1000-541

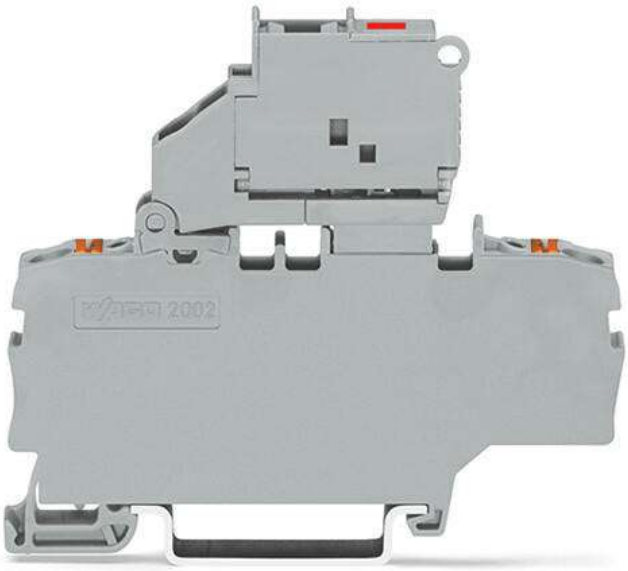

RoHS Compliant ✓ BOMcheck.net Color:

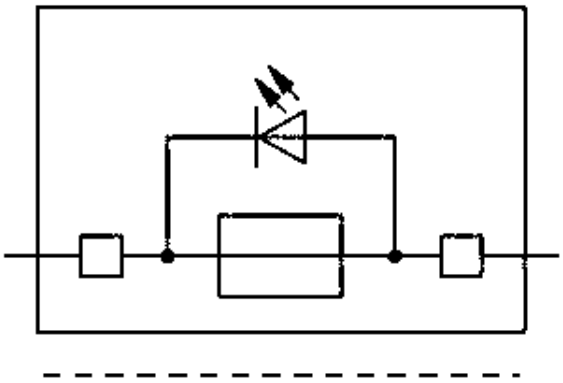

Item description

Safety information 1:
Electrical ratings are given by the fuse and blown fuse indication.
Safety information 2:
Leakage current in case of a blown fuse: LED 2 mA

Data

Electrical data

Power loss (max.) $P_{l\,(max.)}$ (note)

When selecting glass cartridge fuses, make sure that the maximum power loss listed below is not exceeded. The power loss is determined according to IEC or EN 60947-7-3/VDE 0611-6 at 23°C. The temperature rise of the terminal block must be checked

Subject to changes. Please also observe the further product documentation!

WAGO Corporation
Germantown, WI 53022
Phone: 1-800-DIN-RAIL (346-7245) | Fax: (262) 255-6222
Email: info.us@wago.com | Web: www.wago.us

Do you have any questions about our products?
We are always happy to take your call at {0}.

	according to their application and mounting. Higher ambient temperatures represent an additional impact on miniature fuses. Therefore, in such applications, the rated current must be reduced if necessary. More details are available from the manufacturers.
Power loss P_l (max.)	1.6 W
Power loss P_l (note)	Overload and short circuit protection (Individual arrangement)
Power loss P_l 2 (max.)	1.6 W
Power loss P_l 2 (note)	Overload and short circuit protection (Group arrangement)
Power loss P_l 3 (max.)	2.5 W
Power loss P_l 3 (note)	Short circuit protection only (Individual arrangement)
Power loss P_l 4 (max.)	2.5 W
Power loss P_l 4 (note)	Short circuit protection only (Group arrangement)

IEC Approvals

Ratings per	IEC/EN 60947-7-3
Rated voltage (III / 3)	250 V
Rated surge voltage (III/3)	6 kV
Rated current	6.3 A
Legend (ratings)	(III / 3) ≙ Overvoltage category III / Pollution degree 3

UL Approvals

Approvals per	UL 1059
Rated voltage UL (Use Group B)	30 V
Rated current UL (Use Group B)	10 A
Rated voltage UL (Use Group C)	30 V
Rated current UL (Use Group C)	10 A
Rated voltage UL (Use Group D)	30 V

CSA Approvals

Approvals per	C22.2 No 158
Rated voltage CSA (Use Group B)	30 V
Rated current CSA (Use Group B)	10 A
Rated voltage CSA (Use Group C)	30 V
Rated current CSA (Use Group C)	10 A
Rated voltage CSA (Use Group D)	30 V

Subject to changes. Please also observe the further product documentation!

WAGO Corporation
Germantown, WI 53022
Phone: 1-800-DIN-RAIL (346-7245) | Fax: (262) 255-6222
Email: info.us@wago.com | Web: www.wago.us

Do you have any questions about our products?
We are always happy to take your call at {0}.

Rated current CSA (Use Group D)	10 A

Connection data

Connection technology	Push-in CAGE CLAMP®
Actuation type	Push-button
Connectable conductor materials	Copper
Nominal cross-section	2.5 mm²
Solid conductor	0.25 … 4 mm² / 22 … 12 AWG
Solid conductor; push-in termination	0.75 … 4 mm² / 18 … 12 AWG
Fine-stranded conductor	0.25 … 4 mm² / 22 … 12 AWG
Fine-stranded conductor; with insulated ferrule	1 … 2.5 mm² / 18 … 14 AWG
Fine-stranded conductor; with ferrule; push-in termination	1 … 2.5 mm² / 18 … 14 AWG
Note (conductor cross-section)	Depending on the conductor characteristic, a conductor with a smaller cross-section can also be inserted via push-in termination.
Strip length	10 … 12 mm / 0.39 … 0.47 inch
Total number of connection points	2
Total number of potentials	1
Number of levels	1
Wiring type	Front-entry wiring
Number of jumper slots	3

Physical data

Width	6.2 mm / 0.244 inch
Height	72.9 mm / 2.87 inch

Mechanical data

Design	horizontal type
Mounting type	DIN-35 rail
Marking level	Center/side marking

Material data

Color	gray
Insulation material	Polyamide (PA66)
Fire load	0.005 MJ
Weight	14.5 g

Subject to changes. Please also observe the further product documentation!

WAGO Corporation
Germantown, WI 53022
Phone: 1-800-DIN-RAIL (346-7245) | Fax: (262) 255-6222
Email: info.us@wago.com | Web: www.wago.us

Do you have any questions about our products?
We are always happy to take your call at {0}.

Commercial data

Packaging type	BOX
Country of origin	DE
GTIN	4055143962490
Customs tariff number	8536904000

Approvals / Certificates

Ex-Approvals

Logo	Approval	Additional Approval Text	Certificate name
AEx ec IIC / Ex ec IIC U	**AEx** Underwriters Laboratories Inc.	UL 60079	E185892
Ex nA IIC Gc	**CCCEx** CQST/CNEx	CNCA-C23-01	2020312313000288

UL-Approvals

Logo	Approval	Additional Approval Text	Certificate name
c UL us	**UL** Underwriters Laboratories Inc.	UL 1059	E45172

Compatible products

Insulation stop

	Item no.: 2002-171 TOPJOB®S insulation stop; for 2002 series terminal blocks; 0.25 - 0.5 mm2; 5/strip; light gray	www.wago.com/2002-171
	Item no.: 2002-172 TOPJOB®S insulation stop; for 2002 series terminal blocks; 0.75 - 1.0 mm2; 5/strip; dark gray	www.wago.com/2002-172

Carrier rail

	Item no.: 210-112 Steel carrier rail; 35 x 7.5 mm; 1 mm thick; 2 m long; slotted; according to EN 60715; "Hole width 25 mm; silver-colored	www.wago.com/210-112
	Item no.: 210-113 Steel carrier rail; 35 x 7.5 mm; 1 mm thick; 2 m long; unslotted; according to EN 60715; silver-colored	www.wago.com/210-113
	Item no.: 210-114	

Subject to changes. Please also observe the further product documentation!

WAGO Corporation
Germantown, WI 53022
Phone: 1-800-DIN-RAIL (346-7245) | Fax: (262) 255-6222
Email: info.us@wago.com | Web: www.wago.us

Do you have any questions about our products?
We are always happy to take your call at {0}.

	Steel carrier rail; 35 x 15 mm; 1.5 mm thick; 2 m long; unslotted; similar to EN 60715; silver-colored	www.wago.com/210-114
	Item no.: 210-115 Steel carrier rail; 35 x 7.5 mm; 1 mm thick; 2 m long; slotted; according to EN 60715; "Hole width 18 mm; silver-colored	www.wago.com/210-115
	Item no.: 210-118 Steel carrier rail; 35 x 15 mm; 2.3 mm thick; 2 m long; unslotted; according to EN 60715; silver-colored	www.wago.com/210-118
	Item no.: 210-196 Aluminum carrier rail; 35 x 8.2 mm; 1.6 mm thick; 2 m long; unslotted; similar to EN 60715; silver-colored	www.wago.com/210-196
	Item no.: 210-197 Steel carrier rail; 35 x 15 mm; 1.5 mm thick; 2 m long; slotted; similar to EN 60715; silver-colored	www.wago.com/210-197
	Item no.: 210-198 Copper carrier rail; 35 x 15 mm; 2.3 mm thick; 2 m long; unslotted; according to EN 60715; copper-colored	www.wago.com/210-198
	Item no.: 210-504 Steel carrier rail; 35 x 7.5 mm; 1 mm thick; 2 m long; slotted; galvanized; according to EN 60715; silver-colored	www.wago.com/210-504
	Item no.: 210-505 Steel carrier rail; 35 x 7.5 mm; 1 mm thick; 2 m long; unslotted; galvanized; according to EN 60715; silver-colored	www.wago.com/210-505
	Item no.: 210-506 Steel carrier rail; 35 x 15 mm; 1.5 mm thick; 2 m long; unslotted; galvanized; similar to EN 60715; silver-colored	www.wago.com/210-506
	Item no.: 210-508 Steel carrier rail; 35 x 15 mm; 1.5 mm thick; 2 m long; slotted; galvanized; similar to EN 60715; silver-colored	www.wago.com/210-508
End plate		
	Item no.: 2002-991 TOPJOB®S end/intermediate plate; for 2002 series fuse blocks; 2.0 mm wide; gray	www.wago.com/2002-991
	Item no.: 2002-992 TOPJOB®S end/intermediate plate; for 2002 series fuse blocks; 2.0 mm wide; orange	www.wago.com/2002-992
check		
	Item no.: 210-136 Test plug; 2 mm Ø; with 500 mm cable	www.wago.com/210-136
Jumper		
	Item no.: 2004-402 Jumper; 2-way; insulated; light gray	www.wago.com/2004-402
	Item no.: 2004-403 Jumper; 3-way; insulated; light gray	www.wago.com/2004-403
	Item no.: 2004-404 Jumper; 4-way; insulated; light gray	www.wago.com/2004-404

Subject to changes. Please also observe the further product documentation!

WAGO Corporation
Germantown, WI 53022
Phone: 1-800-DIN-RAIL (346-7245) | Fax: (262) 255-6222
Email: info.us@wago.com | Web: www.wago.us

Do you have any questions about our products?
We are always happy to take your call at {0}.

	Item no.: 2004-405 Jumper; 5-way; insulated; light gray	www.wago.com/2004-405
	Item no.: 2004-405/011-000 Star point jumper; 3-way; insulated; light gray	www.wago.com/2004-405/011-000
	Item no.: 2004-406 Jumper; 6-way; insulated; light gray	www.wago.com/2004-406
	Item no.: 2004-406/020-000 Delta jumper; insulated; light gray	www.wago.com/2004-406/020-000
	Item no.: 2004-407 Jumper; 7-way; insulated; light gray	www.wago.com/2004-407
	Item no.: 2004-408 Jumper; 8-way; insulated; light gray	www.wago.com/2004-408
	Item no.: 2004-409 Jumper; 9-way; insulated; light gray	www.wago.com/2004-409
	Item no.: 2004-410 Jumper; 10-way; insulated; light gray	www.wago.com/2004-410
	Item no.: 2004-433 Jumper; from 1 to 3; insulated; light gray	www.wago.com/2004-433
	Item no.: 2004-434 Jumper; from 1 to 4; insulated; light gray	www.wago.com/2004-434
	Item no.: 2004-435 Jumper; from 1 to 5; insulated; light gray	www.wago.com/2004-435
	Item no.: 2004-436 Jumper; from 1 to 6; insulated; light gray	www.wago.com/2004-436
	Item no.: 2004-437 Jumper; from 1 to 7; insulated; light gray	www.wago.com/2004-437
	Item no.: 2004-438 Jumper; from 1 to 8; insulated; light gray	www.wago.com/2004-438
	Item no.: 2004-439 Jumper; from 1 to 9; insulated; light gray	www.wago.com/2004-439
	Item no.: 2004-440 Jumper; from 1 to 10; insulated; light gray	www.wago.com/2004-440
	Item no.: 210-103 Wire commoning chain; insulated; black	www.wago.com/210-103
	Item no.: 210-123	www.wago.com/210-123

Subject to changes. Please also observe the further product documentation!

WAGO Corporation
Germantown, WI 53022
Phone: 1-800-DIN-RAIL (346-7245) | Fax: (262) 255-6222
Email: info.us@wago.com | Web: www.wago.us

Do you have any questions about our products?
We are always happy to take your call at {0}.

	Wire commoning chain; insulated; blue	
Push-In type wire jumper		
	Item no.: 2009-412 TOPJOB®S wire jumper; insulated; 60 mm long; conductor cross section 1.5 mm²; suitable for 2001, 2002, 2003 and 2022 series terminal blocks; gray	www.wago.com/2009-412
	Item no.: 2009-414 TOPJOB®S wire jumper; insulated; 110 mm long; conductor cross section 1.5 mm²; suitable for 2001, 2002, 2003 and 2022 series terminal blocks; gray	www.wago.com/2009-414
	Item no.: 2009-414/000-005 Push-in type wire jumper; 1.5 mm²; insulated; 110 mm long; black	www.wago.com/2009-414/000-005
	Item no.: 2009-414/000-006 Push-in type wire jumper; insulated; 110 mm long; black	www.wago.com/2009-414/000-006
	Item no.: 2009-416 TOPJOB®S wire jumper; insulated; 250 mm long; conductor cross section 1.5 mm²; suitable for 2001, 2002, 2003 and 2022 series terminal blocks; gray	www.wago.com/2009-416
Locking lever		
	Item no.: 210-254 Interlocking link; mechanically locks multiple links; 1 m long; transparent	www.wago.com/210-254
Marking accessories		
	Item no.: 2009-110 Marking strips; for Smart Printer; on reel; not stretchable; plain; snap-on type; white	www.wago.com/2009-110
	Item no.: 2009-115 WMB-Inline; for Smart Printer; 1500 pieces on roll; stretchable 5 - 5.2 mm; plain; snap-on type; white	www.wago.com/2009-115
	Item no.: 2009-115/000-002 WMB-Inline; for Smart Printer; 1500 pieces on roll; stretchable 5 - 5.2 mm; plain; snap-on type; yellow	www.wago.com/2009-115/000-002
	Item no.: 2009-115/000-005 WMB-Inline; for Smart Printer; 1500 pieces on roll; stretchable 5 - 5.2 mm; plain; snap-on type; red	www.wago.com/2009-115/000-005
	Item no.: 2009-115/000-006 WMB-Inline; for Smart Printer; 1500 pieces on roll; stretchable 5 - 5.2 mm; plain; snap-on type; blue	www.wago.com/2009-115/000-006
	Item no.: 2009-115/000-007 WMB-Inline; for Smart Printer; 1500 pieces on roll; stretchable 5 - 5.2 mm; plain; snap-on type; gray	www.wago.com/2009-115/000-007
	Item no.: 2009-115/000-012 WMB-Inline; for Smart Printer; 1500 pieces on roll; stretchable 5 - 5.2 mm; plain; snap-on type; orange	www.wago.com/2009-115/000-012
	Item no.: 2009-115/000-017	

Subject to changes. Please also observe the further product documentation!

WAGO Corporation
Germantown, WI 53022
Phone: 1-800-DIN-RAIL (346-7245) | Fax: (262) 255-6222
Email: info.us@wago.com | Web: www.wago.us

Do you have any questions about our products?
We are always happy to take your call at {0}.

	WMB-Inline; for Smart Printer; 1500 pieces on roll; stretchable 5 - 5.2 mm; plain; snap-on type; light green	www.wago.com/2009-115/000-017
	Item no.: 2009-115/000-023 WMB-Inline; for Smart Printer; 1500 pieces on roll; stretchable 5 - 5.2 mm; plain; snap-on type; green	www.wago.com/2009-115/000-023
	Item no.: 2009-115/000-024 WMB-Inline; for Smart Printer; 1500 pieces on roll; stretchable 5 - 5.2 mm; plain; snap-on type; violet	www.wago.com/2009-115/000-024
	Item no.: 2009-145 Mini-WSB Inline; for Smart Printer; 1700 pieces on roll; stretchable 5 - 5.2 mm; plain; snap-on type; white	www.wago.com/2009-145
	Item no.: 2009-145/000-002 Mini-WSB Inline; for Smart Printer; 1700 pieces on roll; stretchable 5 - 5.2 mm; plain; snap-on type; yellow	www.wago.com/2009-145/000-002
	Item no.: 2009-145/000-005 Mini-WSB Inline; for Smart Printer; 1700 pieces on roll; stretchable 5 - 5.2 mm; plain; snap-on type; red	www.wago.com/2009-145/000-005
	Item no.: 2009-145/000-006 Mini-WSB Inline; for Smart Printer; 1700 pieces on roll; stretchable 5 - 5.2 mm; plain; snap-on type; blue	www.wago.com/2009-145/000-006
	Item no.: 2009-145/000-007 Mini-WSB Inline; for Smart Printer; 1700 pieces on roll; stretchable 5 - 5.2 mm; plain; snap-on type; gray	www.wago.com/2009-145/000-007
	Item no.: 2009-145/000-012 Mini-WSB Inline; for Smart Printer; 1700 pieces on roll; stretchable 5 - 5.2 mm; plain; snap-on type; orange	www.wago.com/2009-145/000-012
	Item no.: 2009-145/000-023 Mini-WSB Inline; for Smart Printer; 1700 pieces on roll; stretchable 5 - 5.2 mm; plain; snap-on type; green	www.wago.com/2009-145/000-023
	Item no.: 2009-145/000-024 Mini-WSB Inline; for Smart Printer; 1700 pieces on roll; stretchable 5 - 5.2 mm; plain; snap-on type; violet	www.wago.com/2009-145/000-024
	Item no.: 2009-191 Group marker carrier	www.wago.com/2009-191
	Item no.: 2009-192 Group marker carrier	www.wago.com/2009-192
	Item no.: 2009-193 Group marker carrier	www.wago.com/2009-193

Subject to changes. Please also observe the further product documentation!

WAGO Corporation
Germantown, WI 53022
Phone: 1-800-DIN-RAIL (346-7245) | Fax: (262) 255-6222
Email: info.us@wago.com | Web: www.wago.us

Do you have any questions about our products?
We are always happy to take your call at {0}.

	Item no.: 2009-198 Adaptor; gray	www.wago.com/2009-198
	Item no.: 248-501 Miniature WSB Quick marking system; plain; Marker width 5 mm; 10 strips with 10 markers per card	www.wago.com/248-501
	Item no.: 248-501/000-002 Mini-WSB marking card; as card; not stretchable; plain; snap-on type; yellow	www.wago.com/248-501/000-002
	Item no.: 248-501/000-005 Mini-WSB marking card; as card; not stretchable; plain; snap-on type; red	www.wago.com/248-501/000-005
	Item no.: 248-501/000-006 Mini-WSB marking card; as card; not stretchable; plain; snap-on type; blue	www.wago.com/248-501/000-006
	Item no.: 248-501/000-007 Mini-WSB marking card; as card; not stretchable; plain; snap-on type; gray	www.wago.com/248-501/000-007
	Item no.: 248-501/000-012 Mini-WSB marking card; as card; not stretchable; plain; snap-on type; orange	www.wago.com/248-501/000-012
	Item no.: 248-501/000-017 Mini-WSB marking card; as card; not stretchable; plain; snap-on type; light green	www.wago.com/248-501/000-017
	Item no.: 248-501/000-023 Mini-WSB marking card; as card; not stretchable; plain; snap-on type; green	www.wago.com/248-501/000-023
	Item no.: 248-501/000-024 Mini-WSB marking card; as card; not stretchable; plain; snap-on type; violet	www.wago.com/248-501/000-024
	Item no.: 793-501 WMB marking card; as card; not stretchable; plain; snap-on type; white	www.wago.com/793-501
	Item no.: 793-501/000-002 WMB marking card; as card; not stretchable; plain; snap-on type; yellow	www.wago.com/793-501/000-002
	Item no.: 793-501/000-005 WMB marking card; as card; not stretchable; plain; snap-on type; red	www.wago.com/793-501/000-005
	Item no.: 793-501/000-006 WMB marking card; as card; not stretchable; plain; snap-on type; blue	www.wago.com/793-501/000-006

Subject to changes. Please also observe the further product documentation!

WAGO Corporation
Germantown, WI 53022
Phone: 1-800-DIN-RAIL (346-7245) | Fax: (262) 255-6222
Email: info.us@wago.com | Web: www.wago.us

Do you have any questions about our products?
We are always happy to take your call at {0}.

	Item no.: 793-501/000-007 WMB marking card; as card; not stretchable; plain; snap-on type; gray	www.wago.com/793-501/000-007
	Item no.: 793-501/000-012 WMB marking card; as card; not stretchable; plain; snap-on type; orange	www.wago.com/793-501/000-012
	Item no.: 793-501/000-017 WMB marking card; as card; not stretchable; plain; snap-on type; light green	www.wago.com/793-501/000-017
	Item no.: 793-501/000-023 WMB marking card; as card; not stretchable; plain; snap-on type; green	www.wago.com/793-501/000-023
	Item no.: 793-501/000-024 WMB marking card; as card; not stretchable; plain; snap-on type; violet	www.wago.com/793-501/000-024
	Item no.: 793-5501 WMB marking card; as card; for terminal block width 5 - 17.5 mm; stretchable 5 - 5.2 mm; plain; snap-on type; white	www.wago.com/793-5501
	Item no.: 793-5501/000-002 WMB marking card; as card; for terminal block width 5 - 17.5 mm; stretchable 5 - 5.2 mm; plain; snap-on type; yellow	www.wago.com/793-5501/000-002
	Item no.: 793-5501/000-005 WMB marking card; as card; for terminal block width 5 - 17.5 mm; stretchable 5 - 5.2 mm; plain; snap-on type; red	www.wago.com/793-5501/000-005
	Item no.: 793-5501/000-006 WMB marking card; as card; for terminal block width 5 - 17.5 mm; stretchable 5 - 5.2 mm; plain; snap-on type; blue	www.wago.com/793-5501/000-006
	Item no.: 793-5501/000-007 WMB marking card; as card; for terminal block width 5 - 17.5 mm; stretchable 5 - 5.2 mm; plain; snap-on type; gray	www.wago.com/793-5501/000-007
	Item no.: 793-5501/000-012 WMB marking card; as card; for terminal block width 5 - 17.5 mm; stretchable 5 - 5.2 mm; plain; snap-on type; orange	www.wago.com/793-5501/000-012
	Item no.: 793-5501/000-014 WMB marking card; as card; for terminal block width 5 - 17.5 mm; stretchable 5 - 5.2 mm; plain; snap-on type; brown	www.wago.com/793-5501/000-014
	Item no.: 793-5501/000-017 WMB marking card; as card; for terminal block width 5 - 17.5 mm; stretchable 5 - 5.2 mm; plain; snap-on type; green	www.wago.com/793-5501/000-017
	Item no.: 793-5501/000-023 WMB marking card; as card; for terminal block width 5 - 17.5 mm; stretchable 5 - 5.2 mm; plain; snap-on	www.wago.com/793-5501/000-023

Subject to changes. Please also observe the further product documentation!

WAGO Corporation
Germantown, WI 53022
Phone: 1-800-DIN-RAIL (346-7245) | Fax: (262) 255-6222
Email: info.us@wago.com | Web: www.wago.us

Do you have any questions about our products?
We are always happy to take your call at {0}.

	type; light green	
	Item no.: 793-5501/000-024 WMB marking card; as card; for terminal block width 5 - 17.5 mm; stretchable 5 - 5.2 mm; plain; snap-on type; violet	www.wago.com/793-5501/000-024
tools		
	Item no.: 210-658 Operating tool; Blade: 3.5 x 0.5 mm; with a partially insulated shaft; angled; short; multicoloured	www.wago.com/210-658
	Item no.: 210-720 Operating tool; Blade: 3.5 x 0.5 mm; with a partially insulated shaft; multicoloured	www.wago.com/210-720
ferrule		
	Item no.: 216-241 Ferrule; Sleeve for 0.5 mm² / 20 AWG; insulated; electro-tin plated; electrolytic copper; gastight crimped; acc. to DIN 46228, Part 4/09.90; white	www.wago.com/216-241
	Item no.: 216-242 Ferrule; Sleeve for 0.75 mm² / 18 AWG; insulated; electro-tin plated; electrolytic copper; gastight crimped; acc. to DIN 46228, Part 4/09.90; gray	www.wago.com/216-242
	Item no.: 216-243 Ferrule; Sleeve for 1 mm² / AWG 18; insulated; electro-tin plated; electrolytic copper; gastight crimped; acc. to DIN 46228, Part 4/09.90; red	www.wago.com/216-243
	Item no.: 216-244 Ferrule; Sleeve for 1.5 mm² / AWG 16; insulated; electro-tin plated; electrolytic copper; gastight crimped; acc. to DIN 46228, Part 4/09.90; black	www.wago.com/216-244
	Item no.: 216-246 Ferrule; Sleeve for 2.5 mm² / AWG 14; insulated; electro-tin plated; electrolytic copper; gastight crimped; acc. to DIN 46228, Part 4/09.90; blue	www.wago.com/216-246
	Item no.: 216-262 Ferrule; Sleeve for 0.75 mm² / 18 AWG; insulated; electro-tin plated; electrolytic copper; gastight crimped; acc. to DIN 46228, Part 4/09.90; gray	www.wago.com/216-262
	Item no.: 216-263 Ferrule; Sleeve for 1 mm² / AWG 18; insulated; electro-tin plated; electrolytic copper; gastight crimped; acc. to DIN 46228, Part 4/09.90; red	www.wago.com/216-263
	Item no.: 216-264 Ferrule; Sleeve for 1.5 mm² / AWG 16; insulated; electro-tin plated; electrolytic copper; gastight crimped; acc. to DIN 46228, Part 4/09.90; black	www.wago.com/216-264
	Item no.: 216-266 Ferrule; Sleeve for 2.5 mm² / AWG 14; insulated; electro-tin plated; electrolytic copper; gastight crimped; acc. to DIN 46228, Part 4/09.90; blue	www.wago.com/216-266

Downloads

Documentation

Additional Information

Technical explanations	2019 Apr 3	pdf 2.2 MB	Download

Subject to changes. Please also observe the further product documentation!

WAGO Corporation
Germantown, WI 53022
Phone: 1-800-DIN-RAIL (346-7245) | Fax: (262) 255-6222
Email: info.us@wago.com | Web: www.wago.us

Do you have any questions about our products?
We are always happy to take your call at {0}.

Environmental Product Compliance

Compliance Search

Environmental Product Compliance 2202-1911/1000-541 2-conductor fuse terminal block; with pivoting fuse holder; with additional jumper position; for 5 x 20 mm miniature metric fuse; with push-button; with blown fuse indication by LED; 12 - 30 V; for DIN-rail 35 x 15 and 35 x 7.5; 2.5 mm²; Push-in CAGE CLAMP®; 2,50 mm²; gray	URL	Download

Installation Notes

Conductor termination

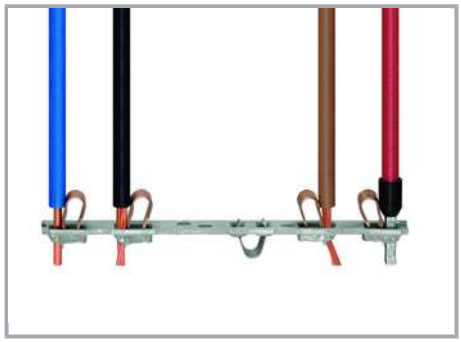

All conductor types at a glance

Push-in termination of solid and ferruled conductors

Push-in termination of solid and ferruled conductors

Insert fine-stranded conductors via operating tool.

Removing all conductors via operating tool.

Commoning

WAGO Corporation
Germantown, WI 53022
Phone: 1-800-DIN-RAIL (346-7245) | Fax: (262) 255-6222
Email: info.us@wago.com | Web: www.wago.us

Do you have any questions about our products?
We are always happy to take your call at {0}.

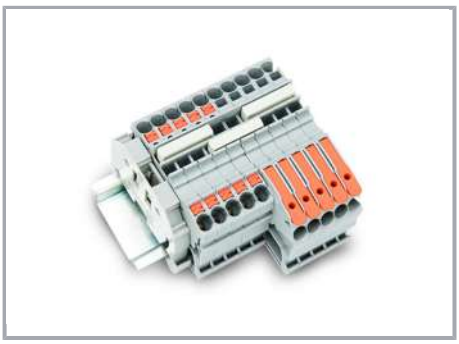

Insert a push-in type jumper bar and push down until it hits the backstop.

Miniature fuses 5 x 20

Series Item No.	Overload and short circuit protection		Short circuit protection only	
	Individual argmt.	Group argmt.	Individual argmt.	Group argmt.
	Fuse terminal blocks			
2202-1611				
2202-1711	1.6 W	1.6 W	2.5 W	2.5 W
2202-1811				
2202-1611/...-...				
2202-1711/...-...	1.6 W	1.6 W	2.5 W	2.5 W
2202-1811/...-...				

When selecting glass cartridge fuses, make sure that the maximum power loss listed below is not exceeded. The power loss is determined according to IEC or EN 60947-7-3/VDE 0611-6 at 23°C. The temperature rise of the terminal block must be checked according to their application and mounting. Higher ambient temperatures represent an additional impact on miniature fuses. Therefore, in such applications, the rated current must be reduced if necessary. More details are available from the manufacturers.

WAGO Corporation
Germantown, WI 53022
Phone: 1-800-DIN-RAIL (346-7245) | Fax: (262) 255-6222
Email: info.us@wago.com | Web: www.wago.us

Do you have any questions about our products?
We are always happy to take your call at {0}.

Application Notes on Terminal Blocks for Glass Cartridge Fuses

Diagram: “Individual Arrangement”

Application Notes on Terminal Blocks for Glass Cartridge Fuses

Diagram: “Block Arrangement”

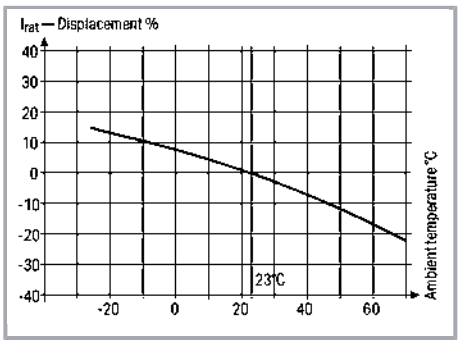

Application Notes on Terminal Blocks for Glass Cartridge Fuses

Nominal current ratings for fuse cartridges are defined differently in international standards. This is why the recommended continuous current-carrying capacity of the fuses is a max. 80% of their nominal current according to DIN 72581/Part 3 (for a surrounding air temperature of 23°C).

Selecting the correct fuse cartridge is important for product safety within applications, as well as for fuse cartridge service life and reliability. Fuse cartridges will only operate perfectly as protection components (break-off point) if they are properly selected and used as intended (i.e., according to the state of the technology and valid specifications, as well as data sheet characteristics), according to basic safety requirements (i.e., persons, animals and property must be protected against hazards).

WAGO Corporation
Germantown, WI 53022
Phone: 1-800-DIN-RAIL (346-7245) | Fax: (262) 255-6222
Email: info.us@wago.com | Web: www.wago.us

Do you have any questions about our products?
We are always happy to take your call at {0}.

Concerning product safety, fuse cartridges must generally be tested under both normal and faulty operating conditions within your application.

Marking

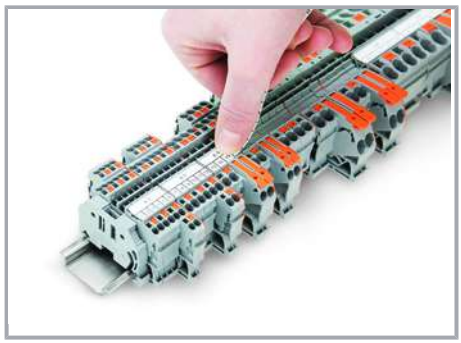

Snapping a marking strip into a marker slot.

Snapping a marking strip into the marker slot.

Product family

TOPJOB® S

TOPJOB® S: In various industrial applications and modern building installations, WAGO's wide and versatile range of rail-mount terminal blocks provides more than just reliable electrical connections.

Show all products from the family

Subject to changes. Please also observe the further product documentation!

WAGO Corporation
Germantown, WI 53022
Phone: 1-800-DIN-RAIL (346-7245) | Fax: (262) 255-6222
Email: info.us@wago.com | Web: www.wago.us

Do you have any questions about our products?
We are always happy to take your call at {0}.