Data sheet | Item number: 769-191

2-conductor carrier terminal block; with 2 jumper positions; for DIN-rail 35 x 15 and 35 x 7.5; 4 mm²; CAGE CLAMP®; 4,00 mm²; gray

www.wago.com/769-191

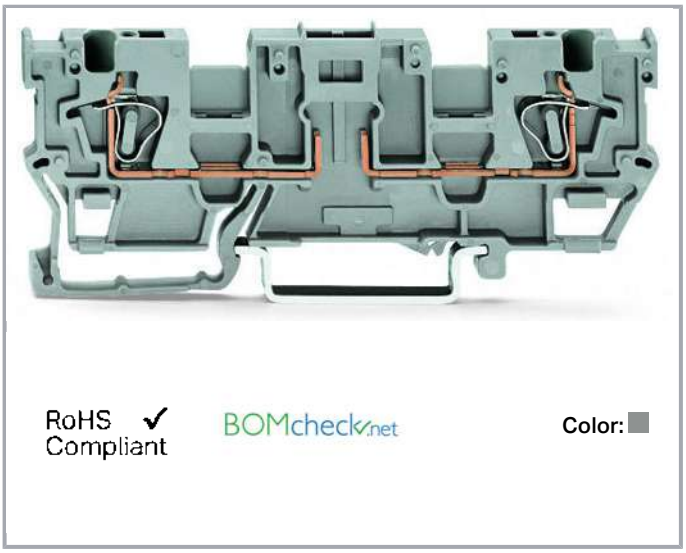

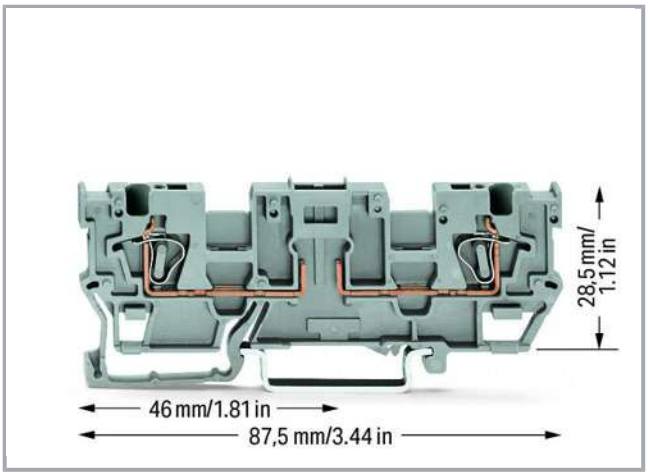

Data

Electrical data

Ratings per IEC/EN 60664-1

Rated voltage (III / 3)	400 V
Rated impulse voltage (III / 3)	6 kV
Rated current	16 A
Legend (ratings)	(III / 3) ≙ Overvoltage category III / Pollution degree 3

Connection data

Connection technology	CAGE CLAMP®
Connectable conductor materials	Copper
Nominal cross section	4 mm²
Solid conductor	0,08 … 4 mm² / 28 … 12 AWG
Fine-stranded conductor	0,08 … 4 mm² / 28 … 12 AWG
Strip length	8 … 9 mm / 0.31 … 0.35 inch
No. of poles	2
Total number of connection points	2
Total number of potentials	2

Subject to changes. Please also observe the further product documentation!

WAGO Kontakttechnik GmbH & Co. KG
Hansastr. 27
32423 Minden
Phone: +49571 887-0 | Fax: +49571 887-169
Email: info.de@wago.com | Web: www.wago.com

Do you have any questions about our products?
We are always happy to take your call at +49 (571) 887-44222.

Number of levels	1
Type of wiring	Front-entry wiring

Geometrical Data

Width	5 mm / 0.197 inch
Height from upper-edge of DIN-35 rail	28,5 mm / 1.122 inch
Depth	87,5 mm / 3.445 inch

Mechanical data

Design	horizontal
Type of mounting	DIN-35 rail
Marking level	Center marking

Material Data

Color	gray
Insulating material	Polyamide 66 (PA 66)
Fire load	0.167 MJ
Weight	8.8 g

Commercial data

Product Group	18 (X-COM-System)
Packaging type	BOX
Country of origin	DE
GTIN	4044918934749
Customs Tariff No.	85369010000

Approvals / Certificates

Country specific Approvals

Logo	Approval	Additional Approval Text	Certificate name
	CCA DEKRA Certification B.V.	EN 60947	NTR NL-7626
	CSA DEKRA Certification B.V.	C22.2 No. 158	1101144

Subject to changes. Please also observe the further product documentation!

WAGO Kontakttechnik GmbH & Co. KG
Hansastr. 27
32423 Minden
Phone: +49571 887-0 | Fax: +49571 887-169
Email: info.de@wago.com | Web: www.wago.com

Do you have any questions about our products?
We are always happy to take your call at +49 (571) 887-44222.

	KEMA/KEUR DEKRA Certification B.V.	EN 60947	2190419.01

Ship Approvals

Logo	Approval	Additional Approval Text	Certificate name
	ABS American Bureau of Shipping	EN 60947	20-HG1941090-PDA
	DNV GL Det Norske Veritas, Germanischer Lloyd	-	TAE00001V2

UL-Approvals

Logo	Approval	Additional Approval Text	Certificate name
	UR Underwriters Laboratories Inc.	UL 1059	20190731-E45172
	UR Underwriters Laboratories Inc.	UL 1977	20151210-E45171

Counterpart

Compatible products

WAGO Kontakttechnik GmbH & Co. KG
Hansastr. 27
32423 Minden
Phone: +49571 887-0 | Fax: +49571 887-169
Email: info.de@wago.com | Web: www.wago.com

Do you have any questions about our products?
We are always happy to take your call at +49 (571) 887-44222.

ferrule

	Item no.: 216-101 Ferrule; Sleeve for 0.5 mm² / AWG 22; uninsulated; electro-tin plated	www.wago.com/216-101
	Item no.: 216-102 Ferrule; Sleeve for 0.75 mm² / AWG 20; uninsulated; electro-tin plated	www.wago.com/216-102
	Item no.: 216-103 Ferrule; Sleeve for 1 mm² / AWG 18; uninsulated; electro-tin plated	www.wago.com/216-103
	Item no.: 216-104 Ferrule; Sleeve for 1.5 mm² / AWG 16; uninsulated; electro-tin plated	www.wago.com/216-104
	Item no.: 216-201 Ferrule; Sleeve for 0.5 mm² / 20 AWG; insulated; electro-tin plated; white	www.wago.com/216-201
	Item no.: 216-202 Ferrule; Sleeve for 0.75 mm² / 18 AWG; insulated; electro-tin plated; gray	www.wago.com/216-202
	Item no.: 216-203 Ferrule; Sleeve for 1 mm² / AWG 18; insulated; electro-tin plated; red	www.wago.com/216-203
	Item no.: 216-204 Ferrule; Sleeve for 1.5 mm² / AWG 16; insulated; electro-tin plated; black	www.wago.com/216-204
	Item no.: 216-206 Ferrule; Sleeve for 2.5 mm² / AWG 14; insulated; electro-tin plated; blue	www.wago.com/216-206
	Item no.: 216-301 Ferrule; Sleeve for 0.25 mm² / AWG 24; insulated; electro-tin plated; yellow	www.wago.com/216-301
	Item no.: 216-302 Ferrule; Sleeve for 0.34 mm² / 22 AWG; insulated; electro-tin plated; green	www.wago.com/216-302

Jumper

	Item no.: 249-123 Push-in type wire jumper; insulated; wire length 180 mm; Conductor cross section 0.75 mm²	www.wago.com/249-123
	Item no.: 249-125 Push-in type wire jumper; insulated; wire length 60 mm; Conductor cross section 0.75 mm²	www.wago.com/249-125
	Item no.: 249-126 Push-in type wire jumper; insulated; wire length 110 mm; Conductor cross section 0.75 mm²	www.wago.com/249-126
	Item no.: 249-127 Push-in type wire jumper; insulated; wire length 250 mm; Conductor cross section 0.75 mm²	www.wago.com/249-127
	Item no.: 280-402 Adjacent jumper; insulated; IN = IN terminal block; gray	www.wago.com/280-402

Subject to changes. Please also observe the further product documentation!

WAGO Kontakttechnik GmbH & Co. KG
Hansastr. 27
32423 Minden
Phone: +49571 887-0 | Fax: +49571 887-169
Email: info.de@wago.com | Web: www.wago.com

Do you have any questions about our products?
We are always happy to take your call at +49 (571) 887-44222.

	Item no.: 280-409 Alternate jumper; insulated; IN = IN terminal block; gray	www.wago.com/280-409
	Item no.: 780-452 Staggered jumper; insulated; from 1 to 2; Spacing: 5 mm; suitable for 2-conductor female plugs; gray	www.wago.com/780-452
	Item no.: 780-453 Staggered jumper; insulated; from 1 to 3; Spacing: 5 mm; suitable for 2-conductor female plugs; gray	www.wago.com/780-453
	Item no.: 780-454 Staggered jumper; insulated; from 1 to 4; Spacing: 5 mm; suitable for 2-conductor female plugs; gray	www.wago.com/780-454
	Item no.: 780-455 Staggered jumper; insulated; from 1 to 5; Spacing: 5 mm; suitable for 2-conductor female plugs; gray	www.wago.com/780-455
	Item no.: 780-456 Staggered jumper; insulated; from 1 to 6; Spacing: 5 mm; suitable for 2-conductor female plugs; gray	www.wago.com/780-456
	Item no.: 780-457 Staggered jumper; insulated; from 1 to 7; Spacing: 5 mm; suitable for 2-conductor female plugs; gray	www.wago.com/780-457
	Item no.: 780-458 Staggered jumper; insulated; from 1 to 8; Spacing: 5 mm; suitable for 2-conductor female plugs; gray	www.wago.com/780-458
assembling		
	Item no.: 209-106 Mounting carrier; for isolated mounting on DIN 35 rails; gray	www.wago.com/209-106
Insulation stop		
	Item no.: 769-470 Insulation stop; 0.08 - 0.2 mm² "s" (0.14 mm² "f-st"); 5 pieces/strip; white	www.wago.com/769-470
	Item no.: 769-471 Insulation stop; 0.25 - 0.5 mm²; 5 pieces/strip; light gray	www.wago.com/769-471
	Item no.: 769-472 Insulation stop; 0.75 - 1 mm²; 5 pieces/strip; dark gray	www.wago.com/769-472
Marking accessories		
	Item no.: 2009-145 Mini-WSB Inline; for Smart Printer; 1700 pieces on roll; stretchable 5 - 5.2 mm; plain; snap-on type; white	www.wago.com/2009-145
	Item no.: 2009-145/000-002 Mini-WSB Inline; for Smart Printer; 1700 pieces on roll; stretchable 5 - 5.2 mm; plain; snap-on type; white	www.wago.com/2009-145/000-002
	Item no.: 2009-145/000-005 Mini-WSB Inline; for Smart Printer; 1700 pieces on roll; stretchable 5 - 5.2 mm; plain; snap-on type; red	www.wago.com/2009-145/000-005
	Item no.: 2009-145/000-006 Mini-WSB Inline; for Smart Printer; 1700 pieces on roll; stretchable 5 - 5.2 mm; plain; snap-on type; blue	www.wago.com/2009-145/000-006

Subject to changes. Please also observe the further product documentation!

WAGO Kontakttechnik GmbH & Co. KG
Hansastr. 27
32423 Minden
Phone: +49571 887-0 | Fax: +49571 887-169
Email: info.de@wago.com | Web: www.wago.com

Do you have any questions about our products?
We are always happy to take your call at +49 (571) 887-44222.

	Item no.: 2009-145/000-007 Mini-WSB Inline; for Smart Printer; 1700 pieces on roll; stretchable 5 - 5.2 mm; plain; snap-on type; white	www.wago.com/2009-145/000-007
	Item no.: 2009-145/000-012 Mini-WSB Inline; for Smart Printer; 1700 pieces on roll; stretchable 5 - 5.2 mm; plain; snap-on type; orange	www.wago.com/2009-145/000-012
	Item no.: 2009-145/000-023 Mini-WSB Inline; for Smart Printer; 1700 pieces on roll; stretchable 5 - 5.2 mm; plain; snap-on type; green	www.wago.com/2009-145/000-023
	Item no.: 2009-145/000-024 Mini-WSB Inline; for Smart Printer; 1700 pieces on roll; stretchable 5 - 5.2 mm; plain; snap-on type; violet	www.wago.com/2009-145/000-024
	Item no.: 248-501 Miniature WSB Quick marking system; plain; Marker width 5 mm; 10 strips with 10 markers per card	www.wago.com/248-501
	Item no.: 248-501/000-002 Mini-WSB marking card; as card; not stretchable; plain; snap-on type; yellow	www.wago.com/248-501/000-002
	Item no.: 248-501/000-005 Mini-WSB marking card; as card; not stretchable; plain; snap-on type; red	www.wago.com/248-501/000-005
	Item no.: 248-501/000-006 Mini-WSB marking card; as card; not stretchable; plain; snap-on type; blue	www.wago.com/248-501/000-006
	Item no.: 248-501/000-007 Mini-WSB marking card; as card; not stretchable; plain; snap-on type; gray	www.wago.com/248-501/000-007
	Item no.: 248-501/000-012 Mini-WSB marking card; as card; not stretchable; plain; snap-on type; orange	www.wago.com/248-501/000-012
	Item no.: 248-501/000-017 Mini-WSB marking card; as card; not stretchable; plain; snap-on type; light green	www.wago.com/248-501/000-017
	Item no.: 248-501/000-023 Mini-WSB marking card; as card; not stretchable; plain; snap-on type; green	www.wago.com/248-501/000-023
	Item no.: 248-501/000-024 Mini-WSB marking card; as card; not stretchable; plain; snap-on type; violet	www.wago.com/248-501/000-024

Protective Warning Marker

Subject to changes. Please also observe the further product documentation!

WAGO Kontakttechnik GmbH & Co. KG
Hansastr. 27
32423 Minden
Phone: +49571 887-0 | Fax: +49571 887-169
Email: info.de@wago.com | Web: www.wago.com

Do you have any questions about our products?
We are always happy to take your call at +49 (571) 887-44222.

	Item no.: 280-415 Protective warning marker; with high-voltage symbol, black; for 5 terminal blocks; yellow	www.wago.com/280-415

General accessories

	Item no.: 280-802 Empty component plug housing; gray	www.wago.com/280-802
	Item no.: 280-804 Empty component plug housing; 10 mm wide; Type 3; 4-pole; gray	www.wago.com/280-804
	Item no.: 286-110 Empty component plug housing; Type 9; 10 mm wide; 4-pole; gray	www.wago.com/286-110
	Item no.: 286-111 Empty component plug housing; Type 10; 15 mm wide; 6-pole; gray	www.wago.com/286-111
	Item no.: 286-112 Empty component plug housing; Type 11; 20 mm wide; 8-pole; gray	www.wago.com/286-112
	Item no.: 286-113 Empty component plug housing; Type 12; 25 mm wide; 10-pole; gray	www.wago.com/286-113
	Item no.: 286-304 Relay module; Nominal input voltage: 24 VDC; 1 changeover contact; Limiting continuous current: 7 A; Red status indicator; Module width: 15 mm; gray	www.wago.com/286-304
	Item no.: 286-304/004-000 Relay module; Nominal input voltage: 24 VDC; 1 changeover contact; Limiting continuous current: 7 A; Path; Red status indicator; Module width: 15 mm; gray	www.wago.com/286-304/004-000
	Item no.: 286-307/004-000 Relay module; Nominal input voltage: 110 VDC; 1 changeover contact; Limiting continuous current: 7 A; Path; Red status indicator; Module width: 15 mm; gray	www.wago.com/286-307/004-000
	Item no.: 286-312 Relay module; Relay with 2 changeover contacts (2u); gray	www.wago.com/286-312
	Item no.: 286-312/004-000 Relay module; Nominal input voltage: 24 VDC; 2 changeover contacts; Limiting continuous current: 5 A; Path; Red status indicator; Module width: 20 mm; gray	www.wago.com/286-312/004-000
	Item no.: 286-316 Relay module; Nominal input voltage: 220 VDC; 2 changeover contacts; Limiting continuous current: 7 A; Red status indicator; Module width: 20 mm; gray	www.wago.com/286-316
	Item no.: 286-320 Relay module; Nominal input voltage: 24 VDC; 1 break and 1 make contact; Limiting continuous current: 6 A; Red status indicator; Module width: 20 mm; gray	www.wago.com/286-320
	Item no.: 286-320/004-000 Relay module; Nominal input voltage: 24 VDC; 1 break and 1 make contact; Path; Red status indicator; Module width: 20 mm; gray	www.wago.com/286-320/004-000
	Item no.: 286-328 Relay module; Nominal input voltage: 24 VDC; 2 make contact; Limiting continuous current: 6 A; Red status indicator; Module width: 20 mm; gray	www.wago.com/286-328

Subject to changes. Please also observe the further product documentation!

WAGO Kontakttechnik GmbH & Co. KG
Hansastr. 27
32423 Minden
Phone: +49571 887-0 | Fax: +49571 887-169
Email: info.de@wago.com | Web: www.wago.com

Do you have any questions about our products?
We are always happy to take your call at +49 (571) 887-44222.

	Item no.: 286-328/004-000 Relay module; Nominal input voltage: 24 VDC; 2 make contact; Limiting continuous current: 6 A; Path; Red status indicator; Module width: 20 mm; gray	www.wago.com/286-328/004-000
	Item no.: 286-336/001-000 Relay module; Nominal input voltage: 24 VDC; 2 break and 2 make contacts; Red status indicator; Module width: 25 mm; gray	www.wago.com/286-336/001-000
	Item no.: 286-344/004-000 Relay module; Nominal input voltage: 24 VDC; 3 break contacts and 1 make contact; Path; Red status indicator; Module width: 25 mm; gray	www.wago.com/286-344/004-000
	Item no.: 286-352/004-000 Relay module; Nominal input voltage: 24 VDC; 4 make contacts; Limiting continuous current: 5 A; Path; Red status indicator; Module width: 25 mm; gray	www.wago.com/286-352/004-000
	Item no.: 286-364 Relay module; Nominal input voltage: 24 VDC; 1 make contact; Limiting continuous current: 5 A; Red status indicator; Module width: 10 mm; gray	www.wago.com/286-364
	Item no.: 286-364/004-000 Relay module; Nominal input voltage: 24 VDC; 1 make contact; Path; Red status indicator; Module width: 10 mm; gray	www.wago.com/286-364/004-000
	Item no.: 286-368 Relay module; Nominal input voltage: 24 VDC; 1 break contact; Limiting continuous current: 5 A; Red status indicator; Module width: 10 mm; gray	www.wago.com/286-368
	Item no.: 286-368/004-000 Relay module; Nominal input voltage: 24 VDC; 1 break contact; Path; Red status indicator; Module width: 10 mm	www.wago.com/286-368/004-000
	Item no.: 286-376 Relay module; Nominal input voltage: 24 VDC; 1 make contact; Limiting continuous current: 5 A; for switching higher DC loads; Red status indicator; Module width: 15 mm; gray	www.wago.com/286-376
	Item no.: 286-380 Bistable relay module; Nominal input voltage: 24 VDC; 1 changeover contact; Limiting continuous current: 6 A; Red status indicator; Module width: 15 mm; gray	www.wago.com/286-380
	Item no.: 286-381 Bistable relay module; Nominal input voltage: 24 VDC; 1 changeover contact; Limiting continuous current: 6 A; Red status indicator; Module width: 15 mm; gray	www.wago.com/286-381
	Item no.: 286-394/004-000 Relay module; Nominal input voltage: 24 VDC; 1 changeover contact; Path; Red status indicator; Module width: 15 mm; light gray	www.wago.com/286-394/004-000
	Item no.: 286-427 Timer relay module; Nominal input voltage: 24 VDC; Limiting continuous current: 5 A; Pulse lengthening: 1 … 10 s; Red status indicator; Module width: 20 mm; gray	www.wago.com/286-427
	Item no.: 286-507 Relay module; Nominal input voltage: 115 VAC; 1 changeover contact; Limiting continuous current: 7 A; Red status indicator; Module width: 15 mm; gray	www.wago.com/286-507
	Item no.: 286-508	

Subject to changes. Please also observe the further product documentation!

WAGO Kontakttechnik GmbH & Co. KG
Hansastr. 27
32423 Minden
Phone: +49571 887-0 | Fax: +49571 887-169
Email: info.de@wago.com | Web: www.wago.com

Do you have any questions about our products?
We are always happy to take your call at +49 (571) 887-44222.

	Relay module; Nominal input voltage: 230 VAC; 1 changeover contact; Limiting continuous current: 7 A; Red status indicator; Module width: 15 mm; gray	www.wago.com/286-508
	Item no.: 286-516 Relay module; Nominal input voltage: 230 VAC; 2 changeover contacts; Limiting continuous current: 7 A; Red status indicator; Module width: 15 mm; gray	www.wago.com/286-516
	Item no.: 286-573 Latching relay module; Nominal input voltage: 24 VDC; 1 changeover contact; Limiting continuous current: 6 A; Red status indicator; Module width: 15 mm	www.wago.com/286-573
	Item no.: 286-575 Latching relay module; Nominal input voltage: 24 VDC; 1 changeover contact; Limiting continuous current: 3 A; Path; Red status indicator; Module width: 22 mm	www.wago.com/286-575
	Item no.: 286-604/004-000 Timer relay module; Nominal input voltage: 24 VDC; Limiting continuous current: 6 A; On-delay: 10 … 100 s; Red status indicator; Module width: 20 mm; gray	www.wago.com/286-604/004-000
	Item no.: 286-640 Timer relay module; Nominal input voltage: 24 VDC; Limiting continuous current: 6 A; Path; Multifunction/Multitime; Yellow status indicator; Module width: 6 mm; gray	www.wago.com/286-640
	Item no.: 286-640/004-000 Multifunction timing relay module; Relay with 1 changeover contact (1u); 4 time ranges; for railway operations; 4 functions; gray	www.wago.com/286-640/004-000
	Item no.: 286-661 Current flow monitoring module; AC currents; adjustable; light gray	www.wago.com/286-661
	Item no.: 286-662 Current flow monitoring module; DC currents; Monitoring range: 0.4 A – 3.5 A; 1 make contact; light gray	www.wago.com/286-662
	Item no.: 286-664 Current flow monitoring module; AC currents; Monitoring range: 1 A – 10 A; 1 changeover contact; light gray	www.wago.com/286-664
	Item no.: 286-665 Current flow monitoring module; AC currents; Monitoring range: 1 A – 10 A; 1 changeover contact; light gray	www.wago.com/286-665
	Item no.: 286-721 Optocoupler module; Nominal input voltage: 24 VDC; Output voltage range: 15 … 30 VDC; Limiting continuous current: 5 A; 3-wire connection/low-side switching; Red status indicator; Module width: 15 mm; gray	www.wago.com/286-721
	Item no.: 286-723 Optocoupler module; Nominal input voltage: 24 VDC; Output voltage range: 15 … 30 VDC; Limiting continuous current: 4 A; 3-wire connection/high-side switching; Red status indicator; Module width: 15 mm; gray	www.wago.com/286-723
	Item no.: 286-725 Optocoupler module; Input AC/DC 10 V ... 30 V; Output DC 24 V/ 1 mA ... 0.5 A; negative switching; gray	www.wago.com/286-725
	Item no.: 286-742 S0 interface power supply; Input voltage: 230 VAC; S0 interface	www.wago.com/286-742
	Item no.: 286-752	

Subject to changes. Please also observe the further product documentation!

WAGO Kontakttechnik GmbH & Co. KG
Hansastr. 27
32423 Minden
Phone: +49571 887-0 | Fax: +49571 887-169
Email: info.de@wago.com | Web: www.wago.com

Do you have any questions about our products?
We are always happy to take your call at +49 (571) 887-44222.

	Optocoupler module; Nominal input voltage: 24 VDC; Output voltage range: 20 … 30 VDC; Limiting continuous current: 0.5 A; 3-wire connection/high-side switching; Frequency: 25 kHz; Red status indicator; Module width: 15 mm; gray	www.wago.com/286-752
	Item no.: 286-752/002-000 Optocoupler module; Red status indicator; gray	www.wago.com/286-752/002-000
	Item no.: 286-790 Optocoupler module; gray	www.wago.com/286-790
	Item no.: 286-791 Optocoupler module; Nominal input voltage: 24 VDC; Output voltage range: 20 … 60 VDC; Limiting continuous current: 0.1 A; 2-wire connection; Frequency: 3 kHz; Red status indicator; Module width: 10 mm; gray	www.wago.com/286-791
	Item no.: 286-792 Optocoupler module; Red status indicator; gray	www.wago.com/286-792
	Item no.: 286-794 Optocoupler module; Nominal input voltage: 24 VDC; Output voltage range: 20 … 60 VDC; Limiting continuous current: 0.1 A; 2-wire connection; Red status indicator; Module width: 10 mm; gray	www.wago.com/286-794
	Item no.: 286-797 Optocoupler module; Red status indicator	www.wago.com/286-797
	Item no.: 286-803 Component module with diode; gray	www.wago.com/286-803
	Item no.: 286-805 Component module with diode; light gray	www.wago.com/286-805
	Item no.: 286-807 Component module with diode; with 7 pcs; Diode 1N4007; with common anode; light gray	www.wago.com/286-807
	Item no.: 286-809 Component module with diode; light gray	www.wago.com/286-809
	Item no.: 286-822 Component module with LED; Red LED; with common cathode	www.wago.com/286-822
	Item no.: 286-826 AND gate module with 6 inputs; light gray	www.wago.com/286-826
	Item no.: 286-830 Bridge rectifier module; Input voltage: 24 VAC; with varistor protective circuit; gray	www.wago.com/286-830
	Item no.: 286-831 Surge suppression module for signal technology; Nominal voltage: 24 VAC/DC; for 2 signal paths with common surge arrester; plugged on rail-mount terminal block, 15 mm wide; gray	www.wago.com/286-831
	Item no.: 286-832 Surge suppression module for signal technology; Nominal voltage: 24 VAC/DC; for 2 signal paths with common surge arrester; pluggable on rail-mount terminal block, 20 mm wide; gray	www.wago.com/286-832
	Item no.: 286-833 Surge suppression module for signal technology; Nominal voltage: 24 VDC; for 1 signal path;	www.wago.com/286-833

Subject to changes. Please also observe the further product documentation!

WAGO Kontakttechnik GmbH & Co. KG
Hansastr. 27
32423 Minden
Phone: +49571 887-0 | Fax: +49571 887-169
Email: info.de@wago.com | Web: www.wago.com

Do you have any questions about our products?
We are always happy to take your call at +49 (571) 887-44222.

	plugged on rail-mount terminal block, 15 mm wide; gray	
	Item no.: 286-834 Surge suppression module for signal technology; Nominal voltage: 12 VDC; for 2 signal paths with common surge arrester; pluggable on rail-mount terminal block, 20 mm wide; gray	www.wago.com/286-834
	Item no.: 286-834/024-000 Surge suppression module for signal technology; Nominal voltage: 24 VDC; for 2 signal paths with common surge arrester; pluggable on rail-mount terminal block, 15 mm wide; gray	www.wago.com/286-834/024-000
	Item no.: 286-840 Bridge rectifier module; Input voltage: 250 VAC; with varistor protective circuit; gray	www.wago.com/286-840
	Item no.: 286-841 Surge suppression module for signal technology; Nominal voltage: 220 VDC; for 2 signal paths with common surge arrester; pluggable on rail-mount terminal block, 25 mm wide; gray	www.wago.com/286-841
	Item no.: 286-842 Surge suppression module for signal technology; Nominal voltage: 230 VAC; for 2 signal paths with common surge arrester; pluggable on rail-mount terminal block, 25 mm wide; gray	www.wago.com/286-842
	Item no.: 286-843 Surge suppression module for signal technology; Nominal voltage: 115 VAC; for 2 signal paths with common surge arrester; pluggable on rail-mount terminal block, 25 mm wide; gray	www.wago.com/286-843
	Item no.: 286-844 Surge suppression module for signal technology; for 2 signal paths with common surge arrester; pluggable on rail-mount terminal block, 25 mm wide; gray	www.wago.com/286-844
	Item no.: 286-890 Component module with fuse; for (5 x 20) mm microfuse; Nominal voltage: 24 VAC/DC; gray	www.wago.com/286-890
	Item no.: 286-891 Component module with fuse; for (5 x 20) mm microfuse; Nominal voltage: 230 VAC/DC; gray	www.wago.com/286-891
	Item no.: 286-895 Switching module; with changeover rocker switch; Switching voltage: 250 VAC; Switching current: 6 A; gray	www.wago.com/286-895
	Item no.: 286-896 Switching module; with momentary switch; Switching voltage: 250 VAC; Switching current: 6 A; gray	www.wago.com/286-896
	Item no.: 786-101 Empty component plug housing; Type 14; 15 mm wide; 6-pole; gray	www.wago.com/786-101
	Item no.: 786-102 Empty component plug housing; Type 15; 20 mm wide; 8-pole; gray	www.wago.com/786-102
	Item no.: 786-103 Empty component plug housing; Type 16; 25 mm wide; 10-pole; gray	www.wago.com/786-103
check		
	Item no.: 210-136 Test plug; 2 mm Ø; with 500 mm cable; red	www.wago.com/210-136

Subject to changes. Please also observe the further product documentation!

WAGO Kontakttechnik GmbH & Co. KG
Hansastr. 27
32423 Minden
Phone: +49571 887-0 | Fax: +49571 887-169
Email: info.de@wago.com | Web: www.wago.com

Do you have any questions about our products?
We are always happy to take your call at +49 (571) 887-44222.

	Item no.: 210-137 Test plug; 2.3 mm Ø; with 500 mm cable; yellow	www.wago.com/210-137
	Item no.: 280-404 Test plug adapter; 5 mm wide; for test plug 210-137 (2.3 mm Ø); suitable for 1.5 mm² - 4 mm² tbs; gray	www.wago.com/280-404
	Item no.: 280-418 Test plug module; modular; suitable for all WAGO 280 and 780 Series rail-mounted terminal blocks with jumper slots in the current bar; gray	www.wago.com/280-418
	Item no.: 280-419 Spacer module; modular; bridging commoned terminal blocks; gray	www.wago.com/280-419
tools		
	Item no.: 210-720 Operating tool; Blade: 3.5 x 0.5 mm; with a partially insulated shaft	www.wago.com/210-720
End plate		
	Item no.: 769-317 End and intermediate plate; 1.1 mm thick; gray	www.wago.com/769-317
	Item no.: 769-318 End and intermediate plate; 1.1 mm thick; orange	www.wago.com/769-318
plug		
	Item no.: 280-801 Empty component plug housing; gray	www.wago.com/280-801
	Item no.: 280-801/281-411 Component plug; for carrier terminal blocks; 2-pole; with diode 1N4007; 5 mm wide; gray	www.wago.com/280-801/281-411
	Item no.: 280-801/281-413 Component plug; for carrier terminal blocks; 1-pole; LED (red); 24 VDC; 5 mm wide; gray	www.wago.com/280-801/281-413
	Item no.: 280-801/281-414 Component plug; for carrier terminal blocks; 1-pole; LED (red); 48 VDC; 5 mm wide; gray	www.wago.com/280-801/281-414
	Item no.: 280-801/281-415 Component plug; for carrier terminal blocks; 1-pole; LED (red); 5 mm wide; gray	www.wago.com/280-801/281-415
	Item no.: 280-801/281-416 Component plug; for carrier terminal blocks; 1-pole; LED (red); 5 mm wide; gray	www.wago.com/280-801/281-416
	Item no.: 280-801/281-417 Component plug; for carrier terminal blocks; 1-pole; 5 mm wide; gray	www.wago.com/280-801/281-417

Subject to changes. Please also observe the further product documentation!

WAGO Kontakttechnik GmbH & Co. KG
Hansastr. 27
32423 Minden
Phone: +49571 887-0 | Fax: +49571 887-169
Email: info.de@wago.com | Web: www.wago.com

Do you have any questions about our products?
We are always happy to take your call at +49 (571) 887-44222.

	Item no.: 280-801/281-418 Component plug; for carrier terminal blocks; 1-pole; 5 mm wide; gray	www.wago.com/280-801/281-418
	Item no.: 280-801/281-420 Component plug; for carrier terminal blocks; 2-pole; with LED and recovery diode; 5 mm wide; gray	www.wago.com/280-801/281-420
	Item no.: 280-801/281-421 Component plug; for carrier terminal blocks; 2-pole; with LED and recovery diode; 5 mm wide; gray	www.wago.com/280-801/281-421
	Item no.: 280-850 Fuse plug; with soldered miniature fuse; 250 mA FF; 5 mm wide; gray	www.wago.com/280-850
	Item no.: 280-850/281-413 Fuse plug; with soldered miniature fuse; with indicator lamp; LED (red); DC 15 - 30 V; 250 mA FF; 5 mm wide; gray	www.wago.com/280-850/281-413
	Item no.: 280-850/281-414 Fuse plug; with soldered miniature fuse; with indicator lamp; LED (red); DC 30 - 65 V; 250 mA FF; 5 mm wide; gray	www.wago.com/280-850/281-414
	Item no.: 280-850/281-415 Fuse plug; with soldered miniature fuse; with indicator lamp; LED (red); AC 15 - 30 V; 250 mA FF; 5 mm wide; gray	www.wago.com/280-850/281-415
	Item no.: 280-852 Fuse plug; with soldered miniature fuse; 500 mA FF; 5 mm wide; gray	www.wago.com/280-852
	Item no.: 280-852/281-413 Fuse plug; with soldered miniature fuse; with indicator lamp; LED (red); DC 15 - 30 V; 500 mA FF; 5 mm wide; gray	www.wago.com/280-852/281-413
	Item no.: 280-852/281-414 Fuse plug; with soldered miniature fuse; with indicator lamp; LED (red); DC 30 - 65 V; 500 mA FF; 5 mm wide; gray	www.wago.com/280-852/281-414
	Item no.: 280-852/281-415 Fuse plug; with soldered miniature fuse; with indicator lamp; LED (red); AC 15 - 30 V; 500 mA FF; 5 mm wide; gray	www.wago.com/280-852/281-415
	Item no.: 280-854 Fuse plug; with soldered miniature fuse; 1 A FF; 5 mm wide; gray	www.wago.com/280-854
	Item no.: 280-854/281-413 Fuse plug; with soldered miniature fuse; with indicator lamp; LED (red); DC 15 - 30 V; 1 A FF; 5 mm wide; gray	www.wago.com/280-854/281-413
	Item no.: 280-854/281-414 Fuse plug; with soldered miniature fuse; with indicator lamp; LED (red); DC 30 - 65 V; 1 A FF; 5 mm wide; gray	www.wago.com/280-854/281-414

Subject to changes. Please also observe the further product documentation!

WAGO Kontakttechnik GmbH & Co. KG
Hansastr. 27
32423 Minden
Phone: +49571 887-0 | Fax: +49571 887-169
Email: info.de@wago.com | Web: www.wago.com

Do you have any questions about our products?
We are always happy to take your call at +49 (571) 887-44222.

	Item no.: 280-854/281-415 Fuse plug; with soldered miniature fuse; with indicator lamp; LED (red); AC 15 - 30 V; 1 A FF; 5 mm wide; gray	www.wago.com/280-854/281-415
	Item no.: 280-856 Fuse plug; with soldered miniature fuse; 2 A FF; 5 mm wide; gray	www.wago.com/280-856
	Item no.: 280-856/281-413 Fuse plug; with soldered miniature fuse; with indicator lamp; LED (red); DC 15 - 30 V; 2 A FF; 5 mm wide; gray	www.wago.com/280-856/281-413
	Item no.: 280-856/281-414 Fuse plug; with soldered miniature fuse; with indicator lamp; LED (red); DC 30 - 65 V; 2 A FF; 5 mm wide; gray	www.wago.com/280-856/281-414
	Item no.: 280-856/281-415 Fuse plug; with soldered miniature fuse; with indicator lamp; LED (red); AC 15 - 30 V; 2 A FF; 5 mm wide; gray	www.wago.com/280-856/281-415
	Item no.: 281-511 Fuse plug; with pull-tab; for miniature metric fuses 5 x 20 mm and 5 x 25 mm; without blown fuse indication; 6 mm wide; gray	www.wago.com/281-511
	Item no.: 281-512 Fuse plug; with pull-tab; for miniature metric fuses 5 x 20 mm and 5 x 25 mm; with port for LED; 6 mm wide; gray	www.wago.com/281-512
	Item no.: 281-512/281-417 Fuse plug; with pull-tab; for miniature metric fuses 5 x 20 mm and 5 x 25 mm; with blown fuse indication by neon lamp; 230 V; 6 mm wide; gray	www.wago.com/281-512/281-417
	Item no.: 281-512/281-418 Fuse plug; with pull-tab; for miniature metric fuses 5 x 20 mm and 5 x 25 mm; with blown fuse indication by neon lamp; 120 V; 6 mm wide; gray	www.wago.com/281-512/281-418
	Item no.: 281-512/281-501 Fuse plug; with pull-tab; for miniature metric fuses 5 x 20 mm and 5 x 25 mm; with LED indicator; 24 V AC/DC; 6 mm wide; gray	www.wago.com/281-512/281-501
Carrier rail		
	Item no.: 210-112 Steel carrier rail; 35 x 7.5 mm; 1 mm thick; 2 m long; slotted; according to EN 60715; "Hole width 25 mm	www.wago.com/210-112
	Item no.: 210-113 Steel carrier rail; 35 x 7.5 mm; 1 mm thick; 2 m long; unslotted; according to EN 60715	www.wago.com/210-113
	Item no.: 210-114 Steel carrier rail; 35 x 15 mm; 1.5 mm thick; 2 m long; unslotted; similar to EN 60715	www.wago.com/210-114
	Item no.: 210-115 Steel carrier rail; 35 x 7.5 mm; 1 mm thick; 2 m long; slotted; according to EN 60715; "Hole width 18 mm	www.wago.com/210-115
	Item no.: 210-118 Steel carrier rail; 35 x 15 mm; 2.3 mm thick; 2 m long; unslotted; according to EN 60715	www.wago.com/210-118

Subject to changes. Please also observe the further product documentation!

WAGO Kontakttechnik GmbH & Co. KG
Hansastr. 27
32423 Minden
Phone: +49571 887-0 | Fax: +49571 887-169
Email: info.de@wago.com | Web: www.wago.com

Do you have any questions about our products?
We are always happy to take your call at +49 (571) 887-44222.

	Item no.: 210-196 Aluminum carrier rail; 35 x 8.2 mm; 1.6 mm thick; 2 m long; unslotted; similar to EN 60715; silver-colored	www.wago.com/210-196
	Item no.: 210-197 Steel carrier rail; 35 x 15 mm; 1.5 mm thick; 2 m long; slotted; similar to EN 60715	www.wago.com/210-197
	Item no.: 210-198 Copper carrier rail; 35 x 15 mm; 2.3 mm thick; 2 m long; unslotted; according to EN 60715; copper-colored	www.wago.com/210-198
	Item no.: 210-504 Steel carrier rail; 35 x 7.5 mm; 1 mm thick; 2 m long; slotted; galvanized; according to EN 60715	www.wago.com/210-504
	Item no.: 210-505 Steel carrier rail; 35 x 7.5 mm; 1 mm thick; 2 m long; unslotted; galvanized; according to EN 60715	www.wago.com/210-505
	Item no.: 210-506 Steel carrier rail; 35 x 15 mm; 1.5 mm thick; 2 m long; unslotted; galvanized; similar to EN 60715	www.wago.com/210-506
	Item no.: 210-508 Steel carrier rail; 35 x 15 mm; 1.5 mm thick; 2 m long; slotted; galvanized; similar to EN 60715	www.wago.com/210-508

Downloads

Documentation

Bid Text

769-191 GAEB X81 - Datei	Feb 19, 2019	xml 3.4 kB	Download
769-191 doc - Datei	Oct 4, 2017	doc 25.6 kB	Download

Additional Information

Technical explanations	Apr 3, 2019	pdf 2.1 MB	Download

CAD/CAE-Data

CAD data

2D/3D Models 769-191	URL	Download

CAE data

EPLAN Data Portal 769-191	URL	Download

WSCAD Universe 769-191

Subject to changes. Please also observe the further product documentation!

WAGO Kontakttechnik GmbH & Co. KG
Hansastr. 27
32423 Minden
Phone: +49571 887-0 | Fax: +49571 887-169
Email: info.de@wago.com | Web: www.wago.com

Do you have any questions about our products?
We are always happy to take your call at +49 (571) 887-44222.

Installation Notes

Assembly

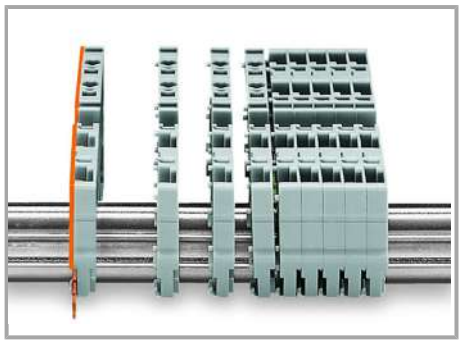

Snap individual carrier terminal blocks onto the carrier rail and slide together.

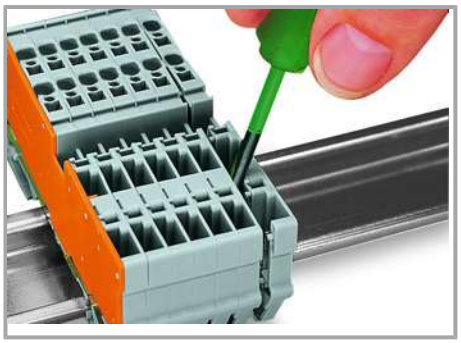

Open the assembly by laterally sliding a block via operating tool and remove terminal block via release lever.

Inserting a conductor

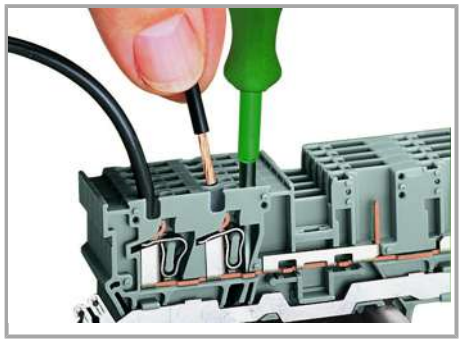

CAGE CLAMP® connection

Carrier terminal block: Insert/remove conductor via operating tool (3.5 x 0.5 mm blade).

Jumpered

WAGO Kontakttechnik GmbH & Co. KG
Hansastr. 27
32423 Minden
Phone: +49571 887-0 | Fax: +49571 887-169
Email: info.de@wago.com | Web: www.wago.com

Do you have any questions about our products?
We are always happy to take your call at +49 (571) 887-44222.

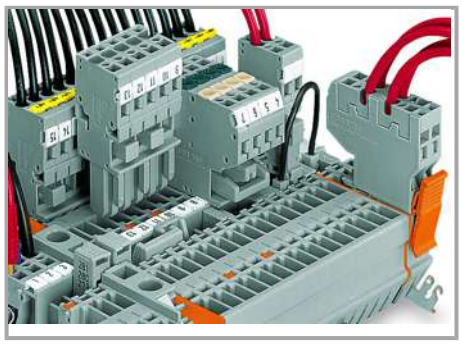

Commoning with adjacent or staggered jumpers –

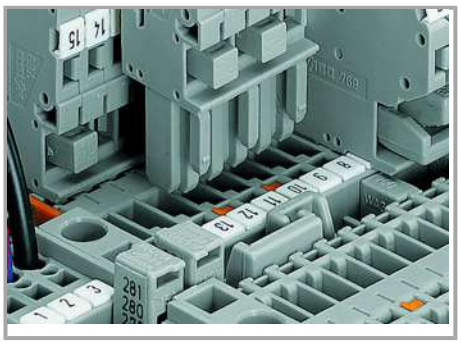

Commoning carrier terminal blocks via staggered jumpers.

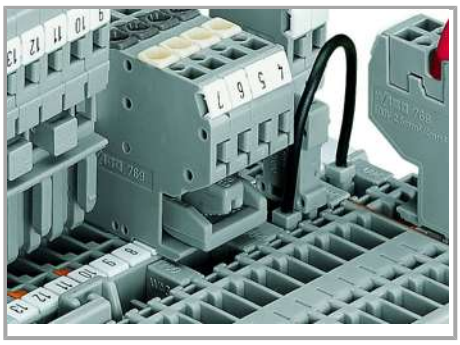

Commoning a 2-conductor female plug via staggered jumper and carrier terminal blocks via adjacent jumpers.

push jumpers down until fully inserted.

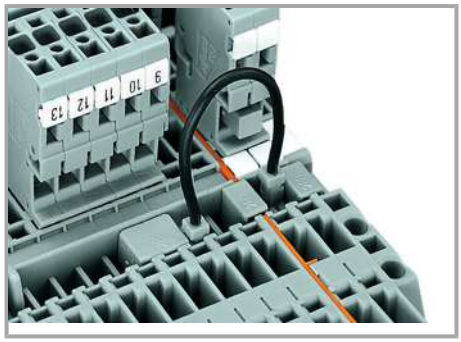

Commoning carrier terminal blocks via push-in type wire jumpers or adjacent jumpers – even over an intermediate plate.

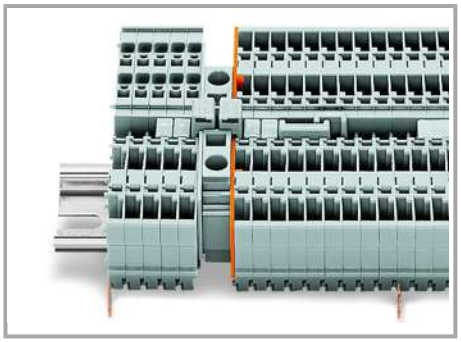

Commoning “supply terminal blocks” (up to 10 mm²/8 AWG) with carrier terminal blocks via step-down jumpers.

Testing

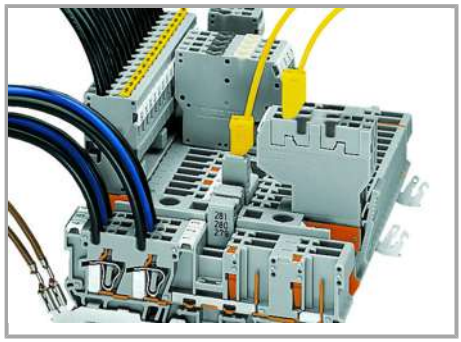

Testing via 2 or 2.3 mm Ø test plugs.

Subject to changes. Please also observe the further product documentation!

WAGO Kontakttechnik GmbH & Co. KG
Hansastr. 27
32423 Minden
Phone: +49571 887-0 | Fax: +49571 887-169
Email: info.de@wago.com | Web: www.wago.com

Do you have any questions about our products?
We are always happy to take your call at +49 (571) 887-44222.

Coding

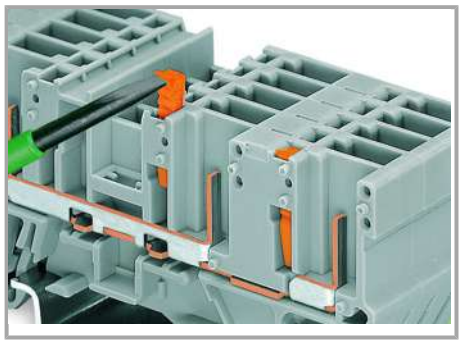

Snap coding pin in proper direction on carrier terminal block.

Shown: Coding pin removal from carrier terminal block.

Locking

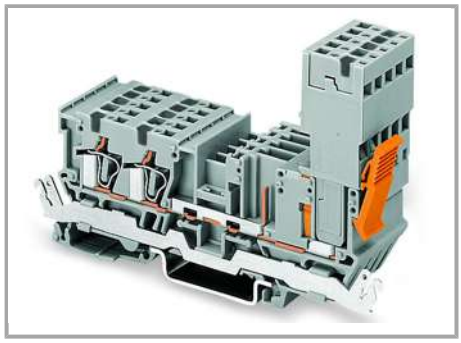

Female plug secured with locking lever on the terminal block side.

Subject to changes. Please also observe the further product documentation!

WAGO Kontakttechnik GmbH & Co. KG
Hansastr. 27
32423 Minden
Phone: +49571 887-0 | Fax: +49571 887-169
Email: info.de@wago.com | Web: www.wago.com

Do you have any questions about our products?
We are always happy to take your call at +49 (571) 887-44222.

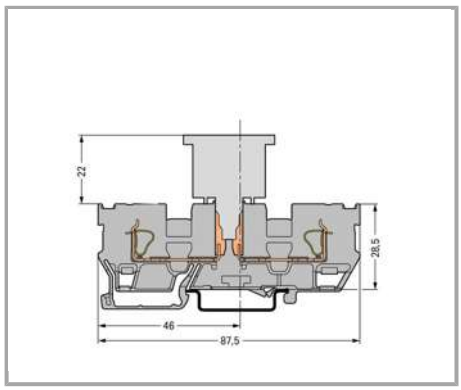

Carrier terminal block

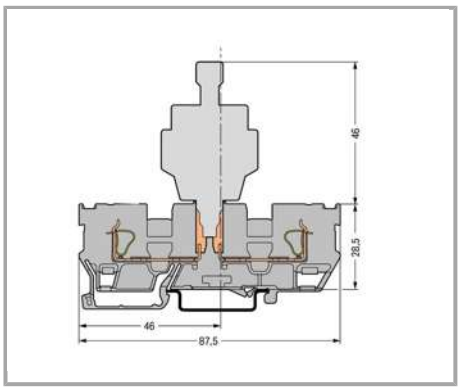

Carrier terminal block

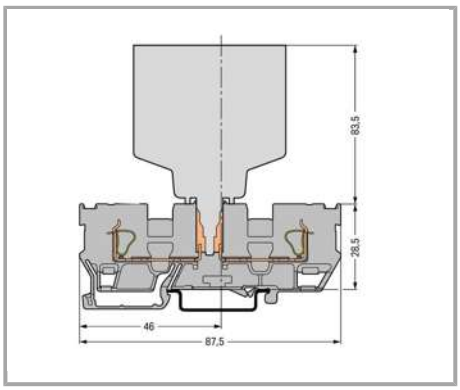

Carrier terminal block

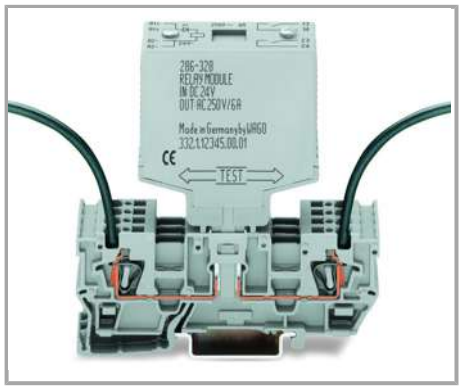

1-conductor/1-conductor carrier terminal block for pluggable modules

Product family

X-COM
Show all products from the family

Subject to changes. Please also observe the further product documentation!

WAGO Kontakttechnik GmbH & Co. KG
Hansastr. 27
32423 Minden
Phone: +49571 887-0 | Fax: +49571 887-169
Email: info.de@wago.com | Web: www.wago.com

Do you have any questions about our products?
We are always happy to take your call at +49 (571) 887-44222.