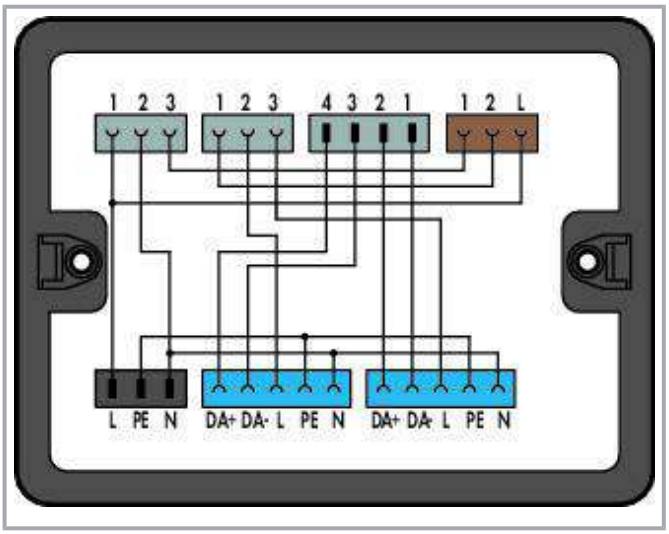


## Data

### Electrical data

| | |
|---|---|
| Note on contact resistance | approx. 1mΩ contact resistance approx. 0.25mΩ contact transition plug/socket |

Subject to changes. Please also observe the further product documentation!

WAGO Corporation
Germantown, WI 53022
Phone: 1-800-DIN-RAIL (346-7245) | Fax: (262) 255-6222
Email: info.us@wago.com | Web: www.wago.us

Do you have any questions about our products?
We are always happy to take your call at +49 (571) 887-44222.

## IEC Approvals

| | |
|---|---|
| Legend (ratings) | (III / 3) ≙ Overvoltage category III / Pollution degree 3 |

## Ratings per UL

| | |
|---|---|
| Rated voltage (UL 1977) | 600 V |
| Rated current UL 1977 | 23 A |

## Physical data

| | |
|---|---|
| Width | 190 mm / 7.48 inch |
| Height | 30 mm / 1.181 inch |

## Mechanical data

| | |
|---|---|
| Mounting type | Wall screw adapter<br>Secured to mounting plate |

## Plug-in connection

| | |
|---|---|
| Mismating protection | Yes |
| Locking of plug-in connection | locking lever |

## Material data

| | |
|---|---|
| Insulation material | Polyamide 66 (PA 66) |
| Contact material | Copper or copper alloy, surface-treated |
| Fire load | 63.739 MJ |
| Weight | 340.2 g |

## Environmental requirements

| | |
|---|---|
| Processing temperature | -5 … +40 °C |
| Continuous operating temperature | -35 … +85 °C |
| Note on continuous operating temperature | Insulating parts for temperatures ≤ 105 °C |

## Commercial data

| | |
|---|---|
| Product Group | 20 (WINSTA) |
| PU (SPU) | 1 Stück |
| Country of origin VKOrg Germany | DE |

Subject to changes. Please also observe the further product documentation!

WAGO Corporation
Germantown, WI 53022
Phone: 1-800-DIN-RAIL (346-7245) | Fax: (262) 255-6222
Email: info.us@wago.com | Web: www.wago.us

Do you have any questions about our products?
We are always happy to take your call at +49 (571) 887-44222.

| | |
|---|---|
| GTIN | 4055143059879 |
| Customs tariff number VKOrg Germany | 85366990990 |

## Installation Notes

Securing the mounting plate with WINSTA®
Distribution Box to the wall (e.g., via stud gun).

Subject to changes. Please also observe the further product documentation!

WAGO Corporation
Germantown, WI 53022
Phone: 1-800-DIN-RAIL (346-7245) | Fax: (262) 255-6222
Email: info.us@wago.com | Web: www.wago.us

Do you have any questions about our products?
We are always happy to take your call at +49 (571) 887-44222.